radio service dealer

MARCH, 1947

IN THIS ISSUE:

ANTENNA MULTICOUPLERS

TRADE STANDARDS FOR TELEVISION

SERVICING P-A INSTALLATIONS

INDUSTRIAL MAINTENANCE

10 Resistance Values in Mallory Double-Tapped Controls . . .

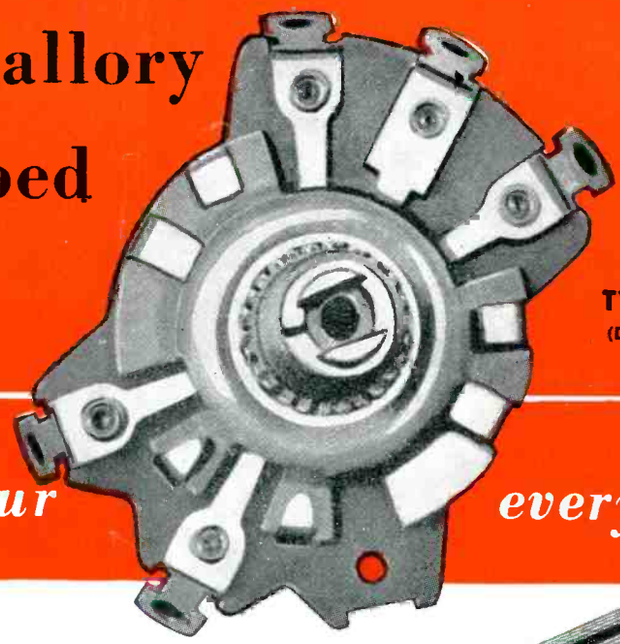

TYPE DTM
(DOUBLE TAP)

To supply your every need

MALLORY is pretty fussy about the taper and resistance values of the controls it makes. That's because it has a thorough knowledge of controls in all original receiving sets . . . conscientiously duplicates these controls with a streamlined, but *complete* line of replacements.

Mallory Double Tapped Midget Controls are a case in point. They come in ten resistance values—to supply every need! By merely combining them with the right Mallory Plug-In Shaft, you can duplicate most double tapped original controls in the "special" category.

Furthermore, Mallory provides *large* double tapped controls in four resistance values. These are to replace originals with fixed shafts of 3 inches or less.

See the Mallory Catalog for the complete story. Or contact your Mallory distributor.

You Expect More—and Get More—from Mallory

INSIST ON MALLORY—
THE COMPLETE CONTROL LINE

Mallory is the manufacturer that offers:

- 33 Correctly Tapered Wire-Wound Controls
- 31 Values in Single Tapped Controls
- 10 Values in Double Tapped Controls
- 12 Clutch Type Controls
- 10 Universal Dual Controls
- 92 Popular Special Controls

P.R. MALLORY & CO. Inc.
MALLORY

VIBRATORS . . . VIBRAPACKS* . . . CAPACITORS . . . VOLUME CONTROLS . . . SWITCHES . . . RESISTORS . . . FILTERS . . . RECTIFIERS . . . POWER SUPPLIES.

*Reg. U. S. Pat. Off.

APPROVED PRECISION PRODUCTS

P. R. MALLORY & CO., Inc., INDIANAPOLIS 6, INDIANA

EDITORIAL

Sleeper Hits Below Belt

I resent and I feel sure all Radio Service Dealers and Servicemen also resent the presumptious and vilifying advertisement that *"FM & Television"* runs for itself on page 53 of its February, 1947 issue. This advertisement, probably written by Milton Sleeper who is Editor & Publisher of *"FM & Television,"* states — and I quote: "It is deplorable, but it's no less true, that 9 out of every 10 radio dealers and servicemen are so thick and dumb that they'll starve to death before they will exert any more mental energy than is required to sell and service cheap AM table models".

Although Milton Sleeper is an old-timer in the radio business I can't condone or agree with the basic purpose he probably had in mind when drafting his advertisement venting his spleen on radio dealers and servicers. He probably meant to imply that 9 out of 10 radio servicemen and dealers have not, up to this writing, gotten 100% behind the sale of February Modulation type radio receivers. And why should they? Isn't it a fact that only a very small percentage of all radios now in use or now being manufactured are FM types? That's not the fault of dealers or servicemen. It's not necessarily the fault of radio set or FM transmitter equipment manufacturers, broadcast stations or the F.C.C. Instead of looking backward, Mr. Sleeper would do well to think ahead.

There are now only 136 FM stations on the air and less than a half-million FM receivers in use. That FM hasn't made "faster progress" in coming of age can be blamed upon almost everyone except radio dealers and servicemen. And Milton Sleeper completely overlooked the fact that FM can never be a successful endeavor without dealers and servicemen, for the former must get such sets to sell, and the latter must install and service them properly, or else his entire house, built of cards, will fall down on his head. I'd welcome Mr. Sleeper's reply to this editorial and hereby invite him to make his apology to the dealers and servicemen who have been so unjustly derided. While he's at it, he might also include a word of regret to "RADIO SERVICE DEALER" because for the past seven years we have consistantly advocated the expanding production, sale and use of Frequency Modulation receivers, knowing that this new art renders a finer service to the set-owning public with potentially greater opportunity for profits to Service Dealers.

Set Production In January, 1947

RMA's figures are interesting: 10% of the 1,564,171 radio sets manufactured were consoles. About 46,000 sets were table model FM-AM types and 5,000 were FM-AM phono-combination consoles. 647 Console and 4,790 table model television receivers made up the balance. In other words, about 57,000 out of a millon and a half radios were FM or television types and over 90% of the AM sets produced were table models in the lower price range.

S. R. COWAN, *Publisher*

Member of the Audit Bureau of Circulations

radio service dealer

VOL. 8 No. 3

SANFORD R. COWAN, Publisher

LEWIS C. STONE, Editor

March 1947

SANFORD L. CAHN, National Advertising Sales Manager

HARRY N. REIZES, Advertising Manager

BRANCH: JAMES C. GALLOWAY, *816 W. 5th St., Los Angeles 13, Calif. Mutual 8335*

Jean M. Wheeler, Circulation Manager

David Saltman, Adv. Production Manager

RADIO SERVICE DEALER (title registered U. S. Pat. Off.) is published monthly at Boston Post Road, Orange, Connecticut, by the Cowan Publishing Corp. Executive & Editorial Offices, 342 Madison Avenue, New York City 17, New York. Publication Office, Boston Post Road, Orange, Conn. Subscription rates: —United States and Possessions $2.00 for 1 year, $3.00 for 2 years; elsewhere $3.00 per year. Single copies: 25c. Printed in U. S. A. Entered as Second Class Matter at the Post Office at Orange, Connecticut, under the Act of March 3, 1879. All subscribers should allow at least three weeks for change of address.

COWAN PUBLISHING CORP.

GET YOUR *PROFIT-MAKING* FEDERAL SELENIUM RECTIFIERS FROM THESE JOBBERS!

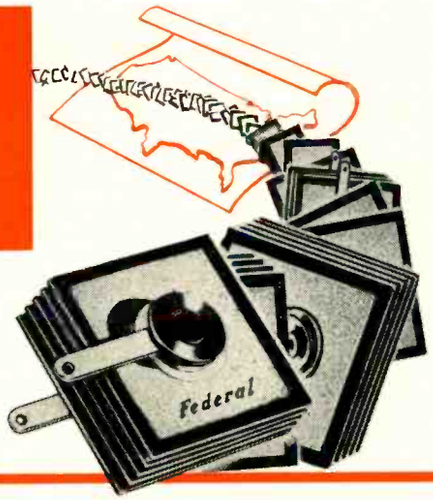

There's an authorized jobber near you who can supply your Federal Miniature Rectifiers — and give you *free selling-aids* that will help you cash in on the big market for this new component that replaces the rectifier tube in AC-DC, Portable, Table, and Console radio receivers.

It's the modern way to give better service, improve set performance, get instant starting and longer life. . . . Get in touch with your nearest jobber today.

ALABAMA
Mobile—Radio Labs

ARIZONA
Phoenix—Southwest Wholesale Radio & Appliance Co.

ARKANSAS
Ft. Smith—Wise Radio Supply

CALIFORNIA
Long Beach—Fred S. Dean Co.
Los Angeles—U. S. Grant Supply Co.
Radio Equipment Distributors
Radio Products Sales Co.
Radio Specialties Company
United Radio Supply Co.
Sacramento—Sacramento Electric Supply
San Diego—Electronic Distributors
Radio Parts Co.
San Francisco—Leo J. Meyberg Co., Inc.
Schuyler-Wilson Co.
Zack-Radio Supply Co.
Santa Ana—Radio & Television Equipment Co.

COLORADO
Denver—Inter-State Radio & Supply Co.
Radio Products Sales Co.

CONNECTICUT
Bridgeport—R. G. Sceli & Co.
Hartford—R. G. Sceli & Co.
New Britain—United Radio Supply

DELAWARE
Wilmington—Radio Electric Service Co. of Pennsylvania

DISTRICT OF COLUMBIA
Washington—Capitol Radio Wholesalers
Emerson Radio of Washington

FLORIDA
Miami—Herman Radio Supply Co.
Thurow Distributors, Inc.
Jacksonville—Thurow Distributors, Inc.
Orlando—Thurow Distributors, Inc.
St. Petersburg—Welch Radio Supply
Tallahassee—Thurow Distributors, Inc.
Tampa—Thurow Distributors, Inc.
W. Palm Beach—Goddard Distributors
Thurow Distributors, Inc.

GEORGIA
Atlanta—Concord Radio Corp.
Augusta—Prestwood Electronics Co.

IDAHO
Boise—Craddock's Radio Supply

ILLINOIS
Chicago—Allied Radio Corporation
The Lukko Sales Corp.
Walker-Jimieson, Inc.

INDIANA
Anderson—Seybert's Radio Supply Co.
Evansville—Wesco Radio Parts
Indianapolis—Kiefer-Stewart Co.
Radio Distributing Company
Rodefield Co.
Van Sickle Radio Supply Co.
Muncie—Standard Radio Parts
South Bend—Colfax Co., Inc.
Terre Haute—Terre Haute Radio

KANSAS
Wichita—Radio Supply Company

KENTUCKY
Louisville—P. I. Burks & Co.
Universal Radio Supply Co.
Owensboro—General Electronic Supply

LOUISIANA
New Orleans—Radio Parts, Inc.
Shuler Supply Co.
Southern Radio Supply Co.
Walther Bros. Company

MAINE
Auburn—Radio Supply Co., Inc.
Bangor—Radio Service Laboratory of New Hampshire & Maine
Portland—Radio Service Laboratory of New Hampshire & Maine

MARYLAND
Baltimore—Kann-Ellert Electronics, Inc.
Wholesale Radio Parts Co., Inc.
Cumberland—Radio Wholesaler

MASSACHUSETTS
Boston—De Mambro Radio Supply Co.
Louis M. Herman Company
Hub Cycle and Radio Co., Inc.
Radio Shack Corporation
Cambridge—Electrical Supply Corp.
The Eastern Company
Fall River—Flint Radio Co.
Roxbury—Gerber Radio Supply Co.
Worcester—De Mambro Radio Supply Co.

MICHIGAN
Detroit—Ingram Distributing Co.
Grand Rapids—Milton Bursma

MINNESOTA
Minneapolis—Lew Bonn Co.

MISSOURI
Kansas City—Potter Radio Company
St. Louis—Radonics

NEBRASKA
Omaha—General Appliance Co.

NEW HAMPSHIRE
Manchester—De Mambro Radio Supply Co.
Radio Service Laboratory

NEW JERSEY
Camden—General Radio Supply Co.
Radio Electric Service Co. of Pennsylvania
Newark—T. A. O'Loughlin & Co.
Variety Electric Company
Perth Amboy—Bennett's Radio Supplies
Phillipsburg—Carl B. Williams

NEW MEXICO
Albuquerque—Radio Equipment Co.

NEW YORK
Albany—Hudson Valley Asbestos Corp.
E. E. Taylor Co.
Binghampton—Broome Distributing Co.
Federal Radio Supply
Morris Distibuting Co., Inc.
Buffalo—Genesee Radio & Parts Co.
Radio Equipment Corp.
Standard Electronics Co.
Elmira—Fred C. Harrison Co.
Le Valley-McLeod-Kincaid Co.
Glens Falls—Ray Distributing Co.
Hempstead—Standard Parts Corp.
New York—Bronx—Slate and Company
Brooklyn—Benray Distributing Co.
Electronic Equipment Company, Inc
Green Radio Distributors
Hornbeam Distributing Co.
Manhattan—H. L. Dalis, Inc.
Federated Purchaser Inc.
Harvey Radio Company, Inc.
Milo Radio & Electronics Corp.
Newark Electric Co. Inc.
Radio Wire Television Inc.
Radionic Equipment Co.
Stan-Burn Radio & Electronics Co.
Terminal Radio Corporation
Queens—Peerless Radio Distributors
Rochester—Hunter Electronics
Masline Radio & Electronic Equipment Co.
Rochester Radio Supply Co.
Schenectady—M. Schwartz & Son
Syracuse—Broome Distributing Co.
W. E. Eerndt
Morris Distributing Co.
Syracuse Radio Supply Co.
Troy—Trojan Radio Co., Inc.
Utica—Beacon Electronics, Inc.
Electronic Lab's & Supply Co.
Vaeth Electric Co.
White Plains—Sound Products Co.
Westchester Electronics Supply Co.

NORTH CAROLINA
Charlotte—Radiotronic Distributors, Inc.
Raleigh—Supreme Radio Suppliers

OHIO
Akron—Brighton Sporting Goods Corp.
Cincinnati—Herrlinger Distributing Co.
Holub & Hogg
Cleveland—Goldhammer, Inc.
Columbus—Hughes-Peters, Inc.
Thompson Radio Supplies
Dayton—Hughes-Peters, Inc.
Standard Radio & Electronics Products Co.
Toledo—Lifetime Sound Equipment Co.
Warren Radio Company

OKLAHOMA
Lawton—Reynolds Radio Supply

OREGON
Portland—Lou Johnson Company
Tracy & Company, Inc.

PENNSYLVANIA
Allentown—Radio Electric Service Co. of Pennsylvania
Ardmore—O. K. Griffith Radio
Erie—Warren Radio Company
Harrisburg—Radio Distributing Co.
Lancaster—Geo. D. Barbey Co.
Mt. Carmel—Big Boys Auto Parts Co.
Philadelphia—Almo Radio Co.
Emerson Radio of Pennsylvania
Lectronic Research Laboratories
Radio Electric Service Co. of Pennsylvania
Pittsburgh—Cameradio Co.
Tydings Company
Reading—Geo. D. Barbey Co.
Scranton—Fred P. Pursell
Sunbury—Big Boys Auto Parts Co.
Wilkes-Barre—General Radio & Electronic Co.
York—J. R. S. Distributors

RHODE ISLAND
Providence—Wm. Dandreta & Co.
De Mambro Radio Supply Co. (Branch)
W. H. Edwards Co.

SOUTH DAKOTA
Rapid City—Giraud Supply Co., Inc.

TENNESSEE
Memphis—Bluff City Distributor Co
Nashville—Currey's, 109 16th Ave.

TEXAS
Dallas—Crabtree's Wholesale Radio
Huey & Philip Hardware Co.
Wilkinson Brothers
Ft. Worth—Fort Worth Radio Supply Co.
Houston—Sterling Radio Products Co.
San Antonio—Mission Radio, Inc.

UTAH
Salt Lake City—S. R. Ross

VERMONT
Burlington—Vermont Hardware Co.
Rutland—Rutland Radio Center

VIRGINIA
Norfolk—Radio Parts Distributing Co.
Radio Supply Company
Roanoke—Leonard Electronic Supply
Staunton—Southern Electric Co.

WASHINGTON
Seattle—Seattle Radio Supply, Inc.
Herb E. Zobrist Co.
Yakima—Lay & Nord

WISCONSIN
Milwaukee—Radio Parts Co., Inc.

OUTSIDE THE UNITED STATES

HAWAII
Hilo—Photo Radio Products, Ltd.
Honolulu—Radio Wholesale & Supply Co.

GET THESE FREE SALES HELPS

SELF-SERVICE COUNTER DISPLAY
Holds 12 individually boxed units.

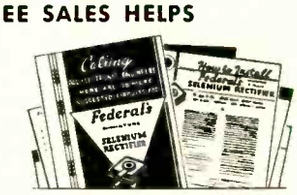

SERVICE MANUALS
Show how to apply and install Federal's Miniature Rectifiers.

ALSO — a 17-by-22 inch 3-color window poster, that gives all sales points at a glance. **Available from your nearest jobber!**

Federal Telephone and Radio Corporation

In Canada: — Federal Electric Manufacturing Company, Ltd., Montreal.
Export Distributors: — International Standard Electric Corp. 67 Broad St., N. Y.

100 Kingsland Road, Clifton, New Jersey

Old-Timers say: "Keep up the good work!"

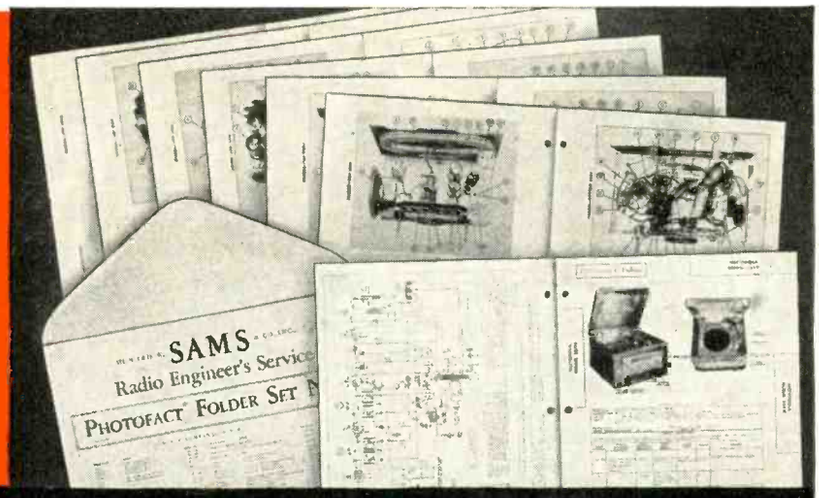

Seasoned Servicemen get Invaluable Help from

PHOTOFACT* FOLDERS

"PHOTOFACT FOLDERS *far exceed any service data I ever saw in my 15 years' experience in the radio field. Keep up the good work!*"—Edmund H. Barnard, Gloucester, N. J.

"PHOTOFACT FOLDERS *are all but human. They're the best I've ever seen—and I've seen everything since the early days of radio.*"—Ben Davis, Galena Park, Texas.

"*Have never seen anything like it in 20 years of servicing. A gift from heaven.*"—Saunders Radio & Sound Co., Baltimore, Md.

"*In 20 years of servicing radios, I've never seen diagrams so clear and easy to read, so complete in every detail. How can you put out so much for so little?*"—Hollis L. Hicklin, Cristobal, Canal Zone.

Exclusive
PHOTOFACT
Features

COMPLETE

Everything you need in one handy, unified form—large schematics, pictorials keyed to parts lists and adjustment data, complete listings of parts values and replacements, alignment, stage gain, circuit voltage and resistance analysis, *coil resistances*, dial cord stringing, disassembly instructions, record changer analysis and repair.

ACCURATE

All sets are actually taken apart and analyzed by experts in the Sams laboratories. Every part is measured, tested and quadruple-checked for accuracy. All data is original. This means the data you get is *right.*

CURRENT

PHOTOFACT FOLDERS are issued twice monthly, as the new receivers come off production lines. You don't have to wait for information. As receiver changes are made, you get correction and addition sheets for your files. Your data is always up to the minute.

EASY TO USE

All diagrams are coded to numbered parts lists. Everything is positively identified for fast work. All folders are set up in uniform, easy-to-follow style: big type, big illustrations—no hunting, guessing or eye strain—no more loss of time and temper.

Hundreds who have been in radio servicing for ten years and more express complete satisfaction with PHOTOFACT FOLDERS. They say it's the best service they've ever found for saving time and money—and they ought to know.

Whether you're an old-timer or newly established, you'll find PHOTOFACT FOLDERS indispensable—equal to another man in your shop for less than 9c per day. They will save you hours of time and effort: place at your fingertips *all* the information you need to do a better job—information compiled from a personal analysis of each receiver.

PHOTOFACT FOLDERS are the result of *actually examining and testing sample sets that are brought to our laboratories.* They cover *all* the latest radios, phonographs, record changers, recorders, communications systems and power amplifiers as they hit the market. And they come to you in sets of 30 to 50 at only $1.50 per set. This low cost includes membership in the Howard W. Sams Institute, which entitles you to free service on special problems affecting your business.

PHOTOFACT FOLDERS actually cost you nothing because they pay for themselves over and over again in time saved. Spend less time, do better work at more profit. Order your PHOTOFACTS today. See your distributor, or use the convenient coupon.

*Trade Mark Reg.

HOWARD W. **SAMS** & CO., INC.
RADIO PHOTOFACT SERVICE
In Canada—write to A. C. SIMMONDS & SONS, 301 King Street East, Toronto, Ontario

Set No. 15 Due March 10—Set No. 16 Due March 25

MAIL THIS ORDER FORM TO YOUR DISTRIBUTOR TODAY. If you do not know his name and address, send it directly to Howard W. Sams & Co., Inc., 2924 East Washington Street, Indianapolis 6, Indiana, and we will see that your nearest distributor gets it. In Canada write to A. C. SIMMONDS & SONS, 301 King Street East, Toronto, Ontario. Canadian Price, $1.75.

☐ Send Set No. 15 ☐ Send Set No. 16 ☐ Send me Volume 1 (including Sets Nos. 1 to 10 inclusive) with De Luxe Binder, $18.39.

(Circle one or more of following) Send Set No. 11, 12, 13, 14 ($1.50 a set)

(Circle one or more of following) Send Set No. 1, 2, 3, 4, 5, 6, 7, 8, 9, 10 ($1.50 a set)

My (check) (money order) (cash) for _____ is enclosed.

(If you send cash, be sure to use registered mail.)

PLEASE PRINT

Name _____

Address _____

City _____ *Zone* _____ *State* _____

In & Around the Trade

Being a condensed digest of production, distribution and merchandising activities in the radio and appliance trade.

L. B. Pambrun (middle) advertising manager for Stewart-Warner Corp., Radio Division, is shown final touches for dealer tie-in campaign and advertising program for 1947. L. Martin Krautter, vice president, Henri, Hurst & McDonald, Inc. (agency) is at right; left is agency art director, Hal Hoops.

District managers get an outline of 1947 merchandising plans and a prevue of new models at a meeting with sales officials of the Farnsworth Television & Radio Corporation.

Left to right *seated:* Clifford A. Malliet, middle and south Atlantic states; E. H. Vogel, vice-president in charge of sales; John S. Garceau, advertising and sales promotion manager; Glenn L. Kuffer, Chicago area.

Standing: Hector A. Castellucci, assistant sales manager; Stanley A. Morrow, assistant manager of advertising and sales promotion; John S. Conger, Rocky Mountain states; Lee V. Hadin, East North Central states; Roy P. Mulhausen, Rocky Mountain states; Leon L. Beardsley, West North Central states; Joseph E. Hendrickson, Chicago area; George S. Jeffers, West South Central States; Arthur E. Champagne, New England states; James H. Kelly, South Atlantic states; George E. Worden, Farnsworth Sales Division.

PROMOTES "LOCAL RADIO REPAIRMAN"

An advertising campaign launched in the Saturday Evening Post by John Meck Industries, Plymouth, Indiana, features a series of half-column ads which suggest that radio-owners should patronize their local radio repairmen in order to overcome the results of the war-time period when repair parts and service were difficult or impossible to obtain. There will be no suggestion that new radio should be purchased, or that the repairman chosen should be conected with a Meck dealer.

"The radio repairman who somehow managed to survive the difficulties of the war years deserves all the help that can be given him by radio manufacturers," president John Meck said. "He is an essential part of the radio business. Aside from that, he has a more thorough knowledge of radio from the consumer's viewpoint than anyone else."

In connection with the series of ads, the company is preparing a dealers' kit which will be distributed through requests to jobbers. The kit will consist of counter display cards, window posters, ad mats and mailing cards, all of which will utilize the cuts and heads featured in the ads. In addition, dealers may purchase a special neon sign from the company at cost, and Meck dealers may obtain the kit free of charge. There is no sales tie-in.

FM AND TV SET PRODUCTION HIGHER

January production of both FM-AM radio receivers and television sets rose sharply over all monthly records in 1946 as the radio industry's total output continued to maintain the high production rate reached in the last quarter of 1946, the Radio Manufacturers Association announced today.

Total set production by RMA set manufacturers was 1,564,171 as compared with 1,454,687 in December.

FM-AM sets manufactured in January totalled 51,318 as compared with 40,903 in December, while television receivers numbered 5,437 or almost 2,000 above the 3,561 produced in December. More than 5,000 of the January output of FM-AM receivers were in the low-cost table model field. The remainder were consoles, most of which were radio-phonograph combinations.

Of the television receivers reported, 4,790 were of the radio table model type, the remainder being consoles.

The proportion of all radio consoles to table models rose substantially during January, indicating a greater availability of wooden cabinets. Consoles accounted for about 10 percent of the January radio output as against a 1946 average of 7 percent, while table models in the same period dropped from a 1946 average of 77 percent to about 64 percent.

[*See page* 30]

SYLVANIA NEWS
RADIO SERVICE EDITION

MAR. *Prepared by* SYLVANIA ELECTRIC PRODUCTS INC., Emporium, Pa. 1947

BRAND NEW SYLVANIA TECHNICAL MANUAL NOW AVAILABLE TO RADIO SERVICEMEN!

Handy Volume Describes Over 500 Receiving Tubes—Is Full Of Helpful, Essential Data

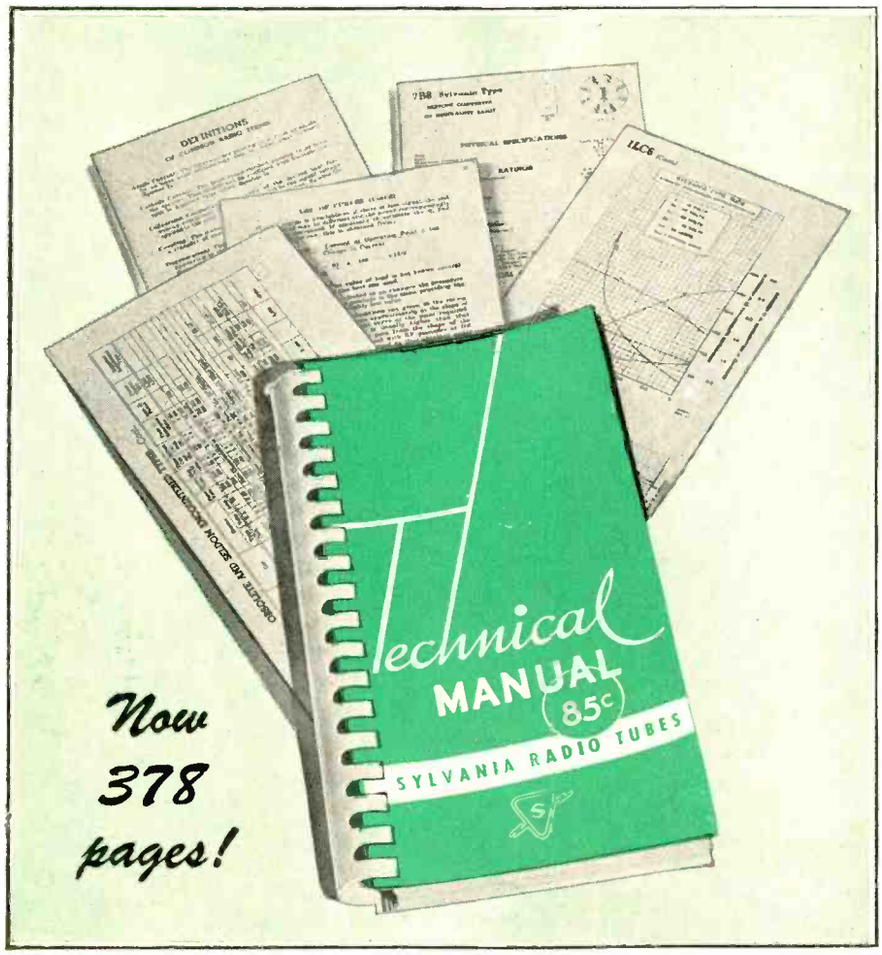

'Here's the new, handy volume of valuable radio tube information radio servicemen everywhere have been waiting for. This bigger, better-than-ever latest Sylvania Technical Manual—listing over 500 radio tube types (old and new)—has been made available as a result of the solution of extensive and elaborate tube engineering problems.

IMPORTANT INFORMATION

You'll surely welcome this handy reference manual, with its important features including: Fundamental Properties of Vacuum Tubes; The Characteristic Curves; General Tube and Circuit Information; Resistance Coupled Amplifier Data—and many more.

AVAILABLE NOW

We urge you to get your copy right away—because we know you'll find this volume chock-full of invaluable information—facts that will be helpful to you day in and day out.

See Your Sylvania Distributor or order from Radio Tube Division, Emporium, Pa.

SYLVANIA ELECTRIC

MAKERS OF RADIO TUBES; CATHODE RAY TUBES; ELECTRONIC DEVICES; FLUORESCENT LAMPS, FIXTURES; WIRING DEVICES; ELECTRIC LIGHT BULBS

For Better Testing!

NEW GENERAL ELECTRIC SERVICE TEST EQUIPMENT FOR UP-AND-COMING SERVICE MEN

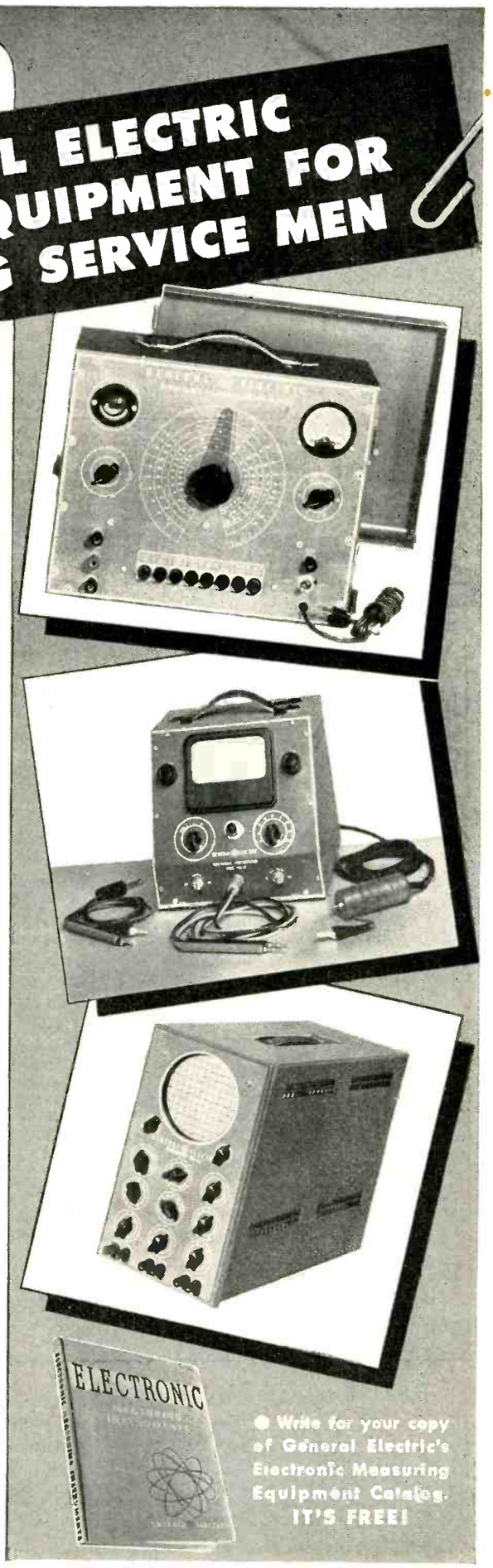

IT'S NEWS—and good news for service men who want to see work move into the shop fast—and out again. The new line of General Electric service test equipment has been designed to do just that. Quick, accurate, efficient service work means more dollars, more satisfied customers and more business.

First in this list of fine equipment is the Capacitance-Resistance Bridge, YCW-1. Check the jobs it can do to make your job easier.

- Measures capacitance from .000005 to 200 microfarads ± 1% in three convenient ranges.
- Measures resistance 5 ohms to 20 megohms ± 2% in two convenient ranges.
- Power factor is measured on the high capacitance range by a potentiometer in series with the standard which has a scale of 0 to 50 percent.
- Insulation resistance is indicated directly by a panel meter. A 0 to 2500 megohm range is covered with a dc voltage supply of 500 volts.
- Electrolytic leakage test is provided which will indicate whether the leakage is excessive.
- Polarizing voltage — a continuously variable dc voltage supply from 0 to 500 volts is available for polarizing the electrolytic condensers.
- Turn ratio of transformers is measured by switching one coil or section of a coil into the Wien bridge circuit and the other section of secondary coil is compared with it.

The YCW-1 is compact, portable and needs only to be plugged into any 115 volt 50 or 60 cycle line to operate.

GENERAL ELECTRIC ELECTRONIC VOLTOHMETER

The Type PM-17 permits measurement of actual operating voltages without excessive circuit loading or detuning. In addition to dc voltages, both audio and radio frequency voltages may be measured from 200 cycles to more than 100 megacycles. An ohmmeter circuit is included for convenience in measuring high and low ohmic values of resistance. Fluctuations in line voltage and changing of tubes have little or no effect on calibrations. Entirely portable, it can be carried anywhere and can be plugged into any 115 volt 60 cycle line. Supplied with the Electronic Voltohmeter are two alligator clips, two pairs of leads, and an r-f probe.

GENERAL ELECTRIC OSCILLOSCOPE

The CRO-5A is really a laboratory quality unit for service work. Accurate and rapid, it was designed primarily for studying voltage and current wave-forms, but it also can be used to study any variable which may be translated into electrical potentials by means of associated apparatus.

All amplifier and sweep d-c potentials are electronically regulated to give a stable trace even under adverse power line variations. The unit is compact, portable, and sturdy in construction so that ordinary jars and vibration will not damage it. Completely self-contained, it will operate on any 115 volt, 60 cycle ac power source.

For complete information on these General Electric Service Test instruments, write to: *General Electric Company, Electronics Department, Syracuse 1, New York.*

GENERAL ELECTRIC

164-F2

● Write for your copy of General Electric's Electronic Measuring Equipment Catalog. IT'S FREE!

FOR TONE TO SATISFY
...THE EXPERTS

THORDARSON amplifiers!

Guarantee natural brilliant sound reproduction with Thordarson...the standard of amplifier quality for 31 years. Manufactured to the same precision requirements which have distinguished Thordarson production since 1895, these new quality units are your assurance of trouble-free performance and absolute tone fidelity under all conditions.

Ask your jobber for full information on Thordarson's new audio amplifier designs. This complete line includes 8 watt, 25 watt and 50 watt amplifiers, for every P. A. application. Now being turned out as fast as modern manufacturing conditions permit, these units will soon be available for your most exacting requirements.

FOR IMMEDIATE DELIVERY

Thordarson 25 Watt Audio Amplifier, Model T31W25A for use in large auditoriums or night club installations. Two low level inputs and one high level input permit the use of two microphones with low and high impedances for use with phono-input for musical background, etc. 3 gain controls, 2 tone controls. All steel cabinet. For immediate delivery.

ELECTRONIC DISTRIBUTOR AND
INDUSTRIAL SALES DEPARTMENT

MAGUIRE INDUSTRIES, INC.

936 N. MICHIGAN AVENUE, CHICAGO 11, ILLINOIS

EXPORT ADDRESS • SCHEEL INTERNATIONAL, INC.
4237-39 N. LINCOLN AVE. CHICAGO 18, ILLINOIS • CABLE—HARSCHEEL

EXTRA DOLLARS FROM EXTRA TAXI-RADIO LOUDSPEAKERS

by CHARLES GOLENPAUL*

RIDING in a taxi recently, I listened to the driver's current gripe. This time it was about his taxi-radio. It seems it just isn't practical to let passengers play the taxi-radio. If the controls are within reach of passengers, they drive the driver crazy with the wrong program, let alone the blasting volume and horrible distortion. Also, the knobs have a mysterious way of disappearing. Maintenance costs soar. Taxi-radio becomes an expensive luxury for the taxi owner.

Now it so happens that I can speak from personal experience in this matter of satisfactory auto-radio entertainment and operation—not exactly as a public taxi driver, you understand, but rather as the driver of a private taxi for family and friends. For years I've been enjoying the conventional auto-radio installed under the dashboard, PLUS a second or extension speaker at the rear of my sedan. By means of toggle switches on the dashboard, I can operate either loudspeaker independently or both together. Everybody is happy. And I drive that auto-radio as well as the car, which is as it should be.

Now this may all sound very elementary but it's such simple ideas that often make the money. My suggestion is that taxis use conventional auto-radios under their dashboard but with a second or extension speaker located at the rear or in the passenger compartment, with dashboard switch control for individual or combined operation. This might well be part of the initial equipment.

However, since there are tens of thousands of taxis already equipped with the conventional single-speaker auto-radio, then I'd urge the radio servicemen to install that second or extension speaker. The live-wire serviceman can readily demonstrate the very real advantage of the additional loudspeaker. Most taxi owners will fall for the idea. It's then just a matter of installing a magnetic speaker, using a suitable coupling transformer where necessary, and putting in the few feet of connection cord and control switch,

[*see page* 30]

**Aerovox Corporation, New Bedford, Mass.*

where you see the name STANCOR you can count on SERVICE

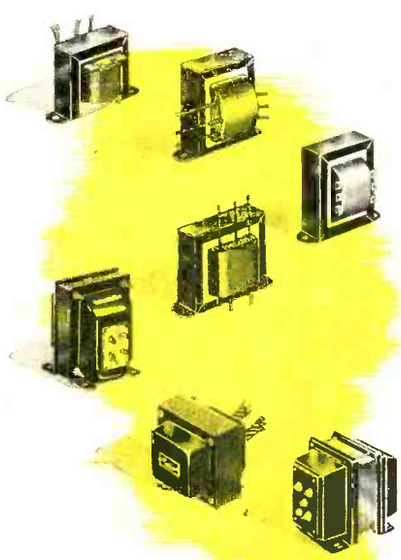

The famous black-and-yellow STANCOR emblem stands for SERVICE . . . in guaranteed transformer performance . . . and in the friendly helpfulness of the Authorized STANCOR Distributor . . . who stands behind the product he sells. . . . Yes, wherever you see the STANCOR emblem you know you will find the most complete selection of Replacement and General Purpose Transformers . . . advanced designs . . . and the universal application that make STANCOR first with radio service men. . . . You bet you can look to STANCOR . . . for the standard of performance that assures you of satisfied customers.

standardize on STANCOR TRANSFORMERS

STANDARD TRANSFORMER CORPORATION · 1500 N. HALSTED ST., CHICAGO 22, ILL.

SPRAGUE TRADING POST

SWAP - BUY - SELL

FOR SALE—Collins 30-J-18 complete with mike, xtals and coils for 80, 40, 20, 11, 10 meters. 400-watts phone or CW. Photos and details on request. Not surplus. W0QFZ, 2705 S. 7th St., Council Bluffs, Iowa.

FOR SALE—Finch QZ-1000 crystal duplicators $20 each; Thermometers, 0–100 degrees C. for temp, test Xtals 75¢ each. Sunbeam Radio Co. 993 2nd Ave., New York 22, N.Y.

FOR SALE—Hallicrafter S-40 receiver, perfect condition. 12 extras added, plus extra 8" speaker $83; Sig. C. LS-3 Speaker, case $5; New Remington noiseless portable $90. R. J. Cartwright, 69 Mountfort St., Boston, Mass.

FOR SALE—Precision multi-meter 830, d-c $18; Clough-Brengle OC sig. generator 92kc to 30mc fundamentals, $35; Simpson tube checker 325, $35. All in excellent condition. All letters answered. Joseph Crandazza, 278 Nassau Rd., Roosevelt, N.Y.

FOR SALE—Jackson dynamic signal analyzer 660, excellent condition; 64 Sylvania receiving tubes, original cartons. Clyde D. Kiebach, 705 18th St., N.W., Apt 821, Washington 6, D.C.

FOR SALE—Scarce radio tubes, attractive prices. Standard brands only. Send for list. Vogue Radio Co., 1470 C.I. Ave., Brooklyn 30, N.Y.

FOR SALE—Standard model volt-ohm milliameter, $25. H. Jacobs, 157 Fulton Place, Paterson, N.J.

FOR SALE—1947 Buick Motorola auto radio with push button tuning, in original carton, $75 postpaid; new Philco auto radios. H. Ursillo, 225 Sutton Ave., E. Providence, R. I.

FOR SALE—U. S. Army phones; dynamic microphones and receivers. Finest quality, water, shock proof. Each set in sealed box. Complete 2-receiver and dynamic hand mike $8.25, postpaid. B. Goldner, 575 Hancock St., Brooklyn, N.Y.

FOR SALE—Jenson 18" speaker, self-contained field supply, a-c. with 80 tube. A-1 condition, 30-35 watts, excellent tone, $45. $5 with order, balance C.O.D. M. A. Porter, 1709 N. Larrabee St., Chicago 14, Ill.

FOR SALE—New HT-9, company guarantee valid. Sell together or individually. Transmitter $250, receiver $68. W9IYG, Herb Rosenthal, 1008 S. 5th St., Champaign, Ill.

FOR SALE—Hallicrafter receiver S-22, good condition $60. A. L. Moore, 1109 S. Jackson St., Auburn, Ind.

FOR SALE—New Dumont 274 'scope $99.50; Meissner 150-B transmitter with sig. shifter; 35 watt phone-CW rig. Other items. Wayne Storch, W9FOC, Beecher, Ill.

FOR SALE—Supreme volt-ohmeter 592; Precision volt-ohmeter 830; Precision 856 20,000 ohm volt-ohmeter. Jules C. Sack, 4768 N. Franklin St., Philadelphia, Penna.

FOR SALE—60% off these tubes: 38, 50, 6AD8, 2B7, 01A, many others, odd battery tubes, brand new in carton. Send for list. C Cassel, R.F.D. 4, Irwin, Pa.

FOR SALE—8-tube Buick Motorola auto radio sealed carton. Fits '41, '42, '46, '47 Buicks. $50 check or money order, will ship immediately. Leading Radio Co., 158-160 E. 3rd St., Mt. Vernon, N.Y.

FOR SALE—SW receivers, 20, 40, 80 meter bands plus broadcast. Includes tubes, built-in power supply, ect. $15. The Bruce Co., 1171 Union St., Manchester, N.H.

SELL OR SWAP—6-12 V transmitter, receiver complete with dynamotor. CW/phone; Ship-to-shore radiophones; handie-talkies; brand new BC-342N-AC receivers. W20EA, 712 Bergen, Linden, N.J.

SELL OR SWAP—Radio sales and service business, est. 1919. Must leave because of health. Complete stock of new, used radios, tubes, parts, equipment. Box 12, Richmond Hill P.O., New York, N.Y.

SELL OR SWAP—For ham equipment: RME-9D receiver complete, crystal and speaker; Clough-Brengle sig. generator; Instructograph; tapes; 5" Triplett foundation meter; Rider's manuals 3-8; Late NRI course. C. W. Hawkenberry, W8WPO, Box 134. Belmont, Ohio.

SELL OR SWAP—500-watt. 20-80 phone transmitter: Xtal 59-59TriTet; RK20; pair 852's class B mod by RK20. ESCO 500V 200W M.G. Need good receiver. Francis L. Duffy, W9DGY, Pontiac, Ill.

SELL OR SWAP—Australian-made HRO, AMR-100, power supply for 12, 110, 220 volts input, speaker, instructions, coils. Will consider trade for sig. generator. W0EEB, R. M. Kloepper, 1908 Vermont St., Lawrence, Kans.

SELL OR SWAP—Heavy Duty Oxford 12" speaker, 80 tube field and case, $12. Heavy duty stand extends 15', aluminum baffle 40" $22. Arnold Radio, 1916 Corby St., Omaha 10, Neb.

SELL OR SWAP—Radiant and Mallory vibrators for sale or trade. Write for list. Leon Bolerder, R.F.D. #1, Chilo, Ohio.

SELL OR SWAP—New aviator's chronograph, 17 jewels, water and shock proof. List price $135. Need amateur and television equipment. E. R. Balak, 2224 Edgar Rd., Linden, N.J.

SWAP—Boles H-3 movie Camera, 1/2" F-1.9 Wollensak, F-1.5 Berthoit, 1 1/2" F-3.5 Bell & Howell with case for Hallicrafter HT-9 or similar transmitter. M. L. Skelton, P.O. Box 39, Fort Lauderdale, Fla.

SWAP—Aerostigmat F-5 12" or Bausch & Lomb Aero Tessar F-6 24" lens for S-40 or BC-344 long wave receiver. Charles A. Conrad 3rd, Box 127. Racine, Wisc.

SWAP—New Precision sig. generator EZ-200; Precision tube tester, set tester 920; Simpson multi-test meter #260; Cornell-Dubilier capacitor analyzer; Hallicrafter S-38. want transmitter, receiver. Write details. E. Muska, P.O. Box 425, Isilen, N.J.

SWAP—BC-375 transmitter, never used, for good set of right hand men's steel shaft gold clubs or hi-voltage power supply components, 3140 V c.t. transformer, 700 MA, ect. Harry. E. Pywell, 44 Channing St., N.W., Washington 1, D.C.

WANTED—25A7 tubes; multi-tester. John H. Green, 518 W. Prospect St., Cameron, Mo.

WANTED—Small, complete exciter. Write description, price, ect. J. E. Moore, 49 Florence Ave., Lowell, Mass.

WANTED—By Ex-G.I.: Cooke radio slide rule made by Keuffel and Esser for radio engineering. New preferred, used one considered. Needed for school immediately. Clifford E. Junkins, Jr., 2464 N. Orchard St., Chicago 14, Ill.

WANTED—Converted BC-348Q with power supply, speaker; Millen exciter with coils, Xtals, tubes, power supply; converter 10-6-2 meters. State prices, details. E. Ballard, 4280 Campbell Drive, Culver City, Calif.

WANTED—25AC5 and 50Y6 tubes, used or new; good output meter; good signal tracer; VFO signal shifter; auto radios. Harold F. Cushing, 174 Mayflower St., Elmwood 10, Calif.

WANTED—Army-Navy receiving, transmitting equipment; radio navigation equipment; Army dynamotor PE-55; will buy other war surplus. State, model, condition and price. Wm. Hansen, 165 Silverbrook, Niles, Mich.

WANTED—Test equipment, all kinds and types, to outfit new radio shop by G.I. going into business. Jack Luskin, 3803 Barrington Rd., Baltimore 15, Md.

WANTED—Power pack for Atwater-Kent model 44. C. B. Dibble, Sidney Center, N.Y.

YOUR OWN AD RUN HERE FREE

The Sprague Trading Post is a free advertising service for the benefit of our radio friends. Providing only that it fits in with the spirit of this service, we'll gladly run your own ad in the first available issue of one of the six radio manazines in which this feature appears. Write CAREFULLY or print. Hold it to 40 words or less. Confine it to radio subjects. Make sure your meaning is clear. No commercial advertising or the offering of merchandise to the highest bidder is acceptable. Sprague, of course, assumes no responsibility in connection with merchandise bought or sold through these columns or for the resulting transactions.

Send your ad to Dept. RSD-37

SPRAGUE PRODUCTS COMPANY

North Adams, Mass.

(Jobbing distributing organization for products of the Sprague Electric Co.)

ASK FOR SPRAGUE CAPACITORS and *KOOLOHM RESISTORS *by name!*

*Trademark Reg. U.S. Pat. off.

SNARLED BATTERY INVENTORY FLOORING YOU?

Simplify your stock with one complete line –

"Eveready" Radio Batteries

IF YOU'RE tired of stocking all kinds of "Johnny-come-lately" radio batteries, just think of this:

"Eveready" radio batteries fit virtually *all makes* of sets! You carry less inventory, tie up less capital, and insure *more* customer satisfaction . . . because you are giving your customers the recognized *battery* brand! You don't have to buy anything else to get "Eveready" radio batteries—and they are *never* marketed under any other brand name, or private label!

Get out from under that complicated battery inventory. Standardize on famous "Eveready" radio batteries now!

EVEREADY
TRADE-MARKS
MINI-MAX
RADIO BATTERIES

The registered trade-marks "Eveready" and "Mini-Max" distinguish products of

NATIONAL CARBON COMPANY, INC.
30 East 42nd Street, New York 17, N. Y.
Unit of Union Carbide and Carbon Corporation

Go to a Radio Manufacturer for Radios — a Battery Manufacturer for Batteries!

Antenna Multicouplers

by FRANK C. JONES

IN USE TODAY are numerous installations of several receivers connected to an array of whip or short vertical antennas which could be made to operate more effectively from a single, good antenna and an antenna multicoupler of correct design. The purpose of the multicoupler is to provide a means of connecting two or more radio receivers to a single antenna without interaction or loss. Basic circuit design calls for two or three stages of wide-band r-f amplifiers capable of passing all desired signals, such as from 2 to 15 mc, without loss and with as little added noise and cross-modulation as possible.

When two or more receivers are connected in series or parallel to a single antenna, the usual result is a considerable loss in signal, as well as difficulty from cross-talk and additional heterodyne whistles as the individual receivers are tuned to various signals. The use of small antennas offers a slight improvement, but there remains the possibility of interaction. Small antennas, such as an array of vertical whips spaced a foot or so apart, similar to those at various airports, give very poor signal-to-noise ratio.

A single double-doublet all-wave antenna will usually produce signals far better with respect to noise conditions, and when used with an antenna multicoupler it is possible to operate from 2 to 12 receivers from this one antenna. The double-doublet antenna consists of a long horizontal doublet centerfed with a smaller doublet beneath and slanting downward at 20° or 30°, as indicated in *Fig. 1*. An antenna of this type will function effectively from 2 to nearly 20 mc.

Filter Design

If an antenna multicoupler is used near a high power transmitter, some cross-talk can be expected in the wide band r-f amplifier tubes. Broadcast or low frequency signals can be attenuated by the use of a high-pass filter of the general form shown in *Fig. 2*. Multicouplers will pass signals from less than 100 kc upward to their highest passband frequency. Normally, for shortwave operation, a high-pass filter cutting off at approximately 1600 or 1700 kc will not appreciably attenuate frequencies above 2 mc, even if the coils are wound with small wire on ⅜-in. dia. forms, and conventional small mica condensers are used in the system. The high-pass filters shown in *Fig. 2*, and as part of the multicouplers in *Figs. 3* and *4*, were designed from the expressions:

$$L_1 = \frac{.15R}{f}$$

$$C_1 = \frac{.265}{R \times f}, \quad C_2 = \frac{.08}{R \times f}$$

$$L_3 = \frac{.08R}{f}$$

$$L_2 \cong 1.25\ L_3$$

where L = microhenrys
R = input = output termination impedance
f = cut-off frequency in mc
C = microfarads

These expressions were derived from standard high-pass filter formulas using m = .6 end sections with π type intermediate sections.

Circuit Design

Untuned wide-band r-f amplifiers are normally constructed with tubes having high mutual conductance, such as 6AC7, or in some cases 6SG7 tubes. The design of the first stage must be along the lines of typical video systems in which the tube and other shunt capacities are made to act as part of a low-pass filter. The system shown in *Fig. 5-B* has about 50 per cent more gain than the one in *Fig. 5-A*. Where several tubes are connected in parallel, as in *Fig. 4*, the capacity C_2 of *Fig. 5-B* is of the order of 50μμfd for five 6SG7 tubes and about 30 per cent more for 6AC7 tubes. 6SG7 tubes were chosen in the second stage of *Fig. 4* because of their lower input capacity. The circuits of *Fig. 5* indicate on the diagram the values of R and L which should be used for any value of C_1 and C_2 for producing amplification up to the highest frequency desired.

The second stage connects to the radio receiver input which may be of low impedance, with a resultant loss through this stage. The input r-f transformer can be made to give a voltage

Figure 1. Double-Doublet Antenna.

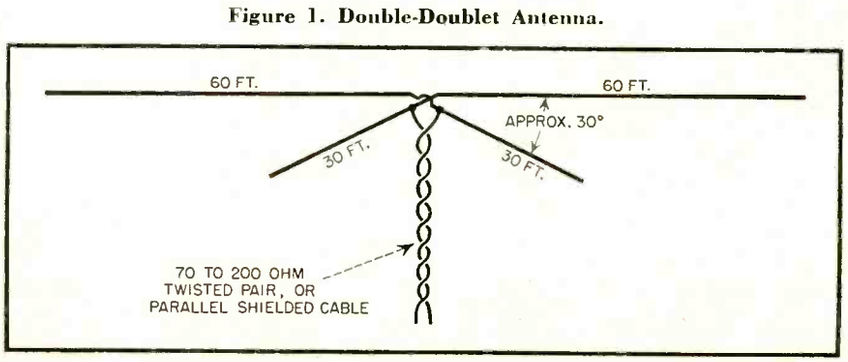

Figure 2. High Pass Filter.

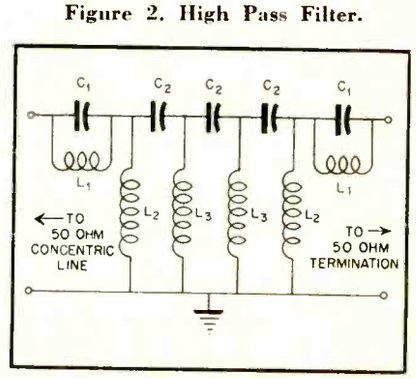

gain of 2 or 2½ by using a larger diameter (1-inch) iron dust core having good "Q" characteristics over the entire short-wave band. Type 6AC7 tubes are indicated for the first stage, since some gain is needed in this portion of the circuit throughout the entire band-pass of frequencies. A gain of from 3 to 10 is obtainable, depending upon the width of pass-band, in the 6AC7 stage which offsets the loss in the second stage.

The circuit of *Fig. 3* is apparently as simple as can be made for operation over the band of 2 to 16 mc. The power supply requirements are not severe, and the units are easily constructed. Top and bottom views of this type are shown in one of the illustrations. The input and output terminals can be made as shown, or preferably to small concentric line jacks and plugs for receiver patching service. The resistor network output scheme of *Fig. 3* eliminates the need of separate output tubes for each receiver, but at considerable loss in signal and some cross-talk which may at times be very objectionable. The isolation between receivers is not sufficient where any oscillator radiation is present, in which case the type of coupler shown in *Fig. 4* is more satisfactory.

The coupler of *Fig. 4* is illustrated in the photographs. The unique power supply rectifier is only for the purpose [*see page* 36]

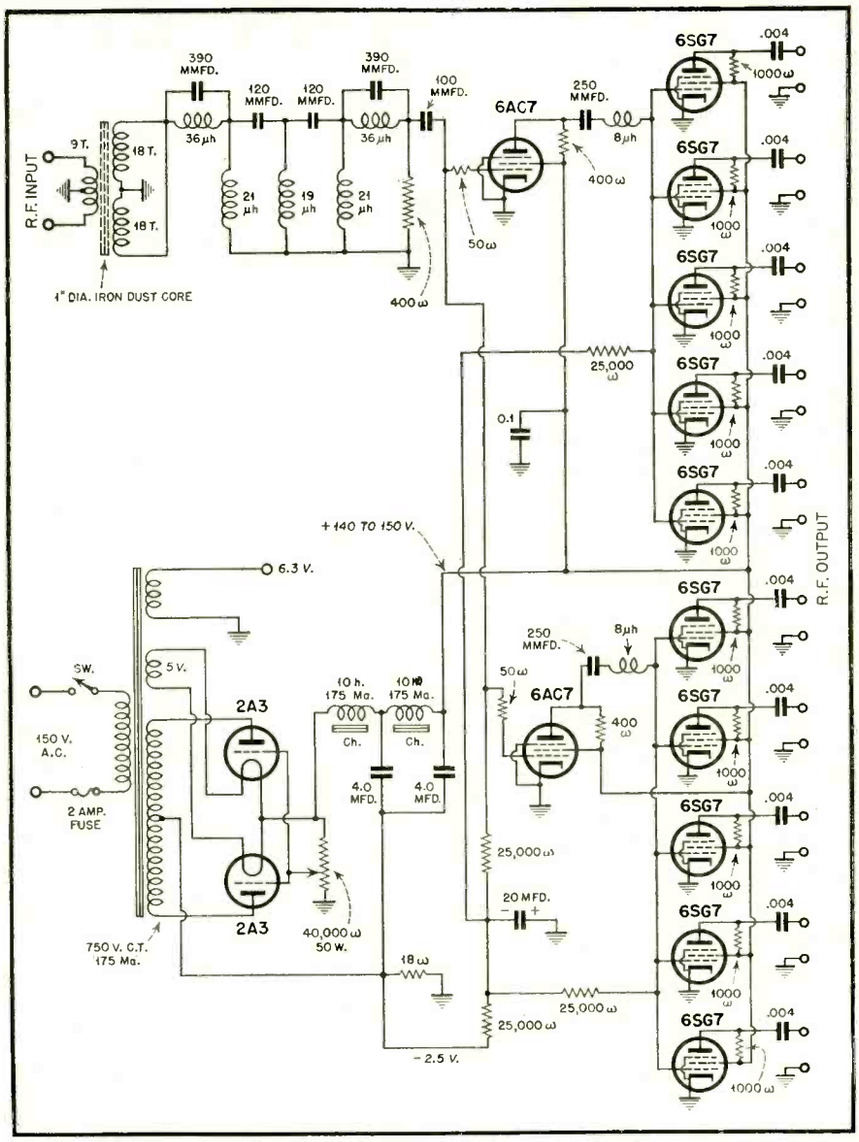

Figure 3 (below). 2-16 MC Antenna Multicoupler.

Figure 4 (above). 2-15 MC Antenna Multicoupler.

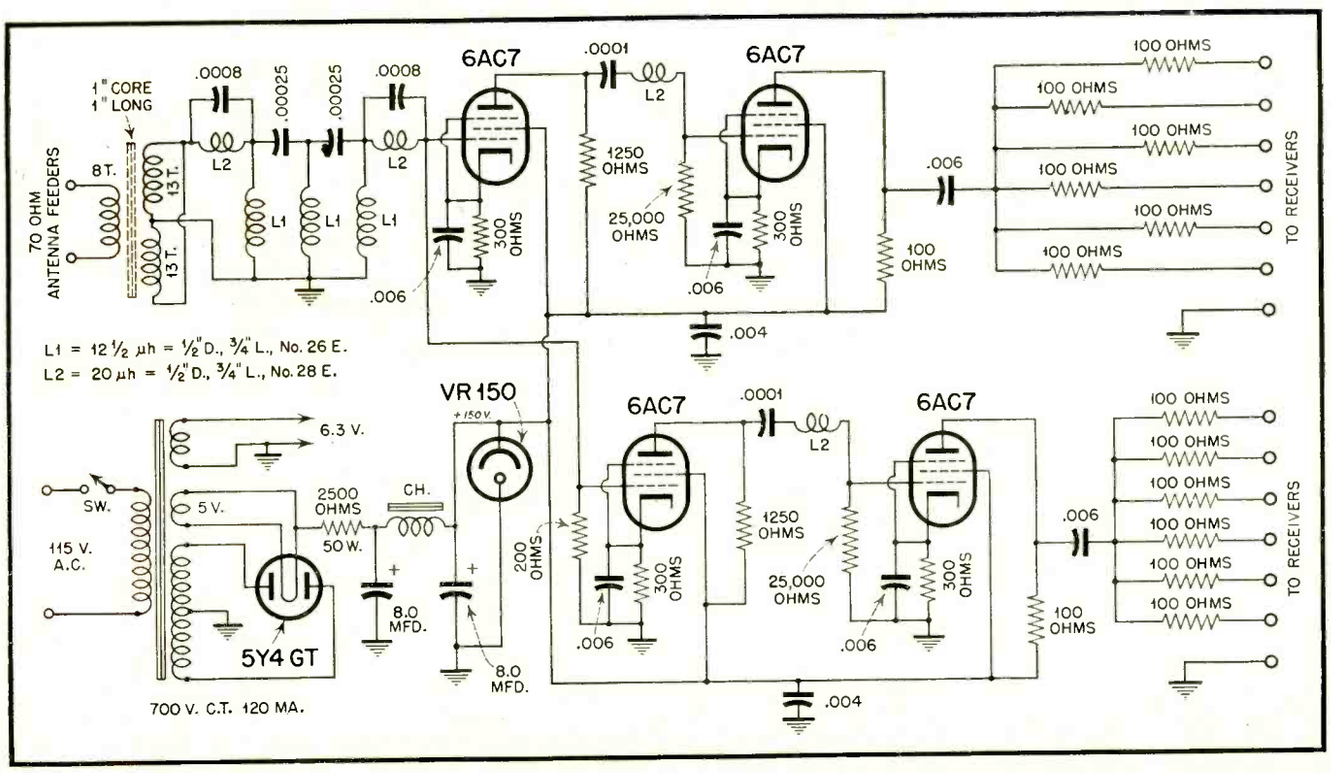

SERVICING PUBLIC

Some specialized equipment is necessary for the maintenance of p.a. apparatus, such as an audio signal tracer, but much can be done with ordinary equipment available to the average serviceman.

PUBLIC ADDRESS EQUIPMENT makes use of standard parts that may be employed in the audio section of a radio receiver and special parts peculier to p.a. such as mikes, re-entrant horns, directional baffles, audio lines and transformers used for impedance matching of loudspeakers and mikes to the lines. There is much that is common to radio servicing and public address work and this field is a natural one for the radio technician.

SOURCES OF BUSINESS

The p.a. installation may range from a small portable job to a relatively complicated one in a large theatre or stadium. *The average serviceman operating his own shop and working with a small staff, finds his greatest opportunities in small installations, church affairs, carnivals, store demonstrations, etc.* Big jobs are usually handled by contractors who have radio engineers, electrical engineers or sound engineers available to plan the installation. The electrical and acoustical design problems for many large jobs may be quite involved and difficult to solve. Often, experimental or cut and try methods are necessary.

While the average serviceman may not install equipment on a large scale basis, very often he has *the opportunity to maintain and service the larger installations after the equipment has been in service a sufficiently long period to require serious maintenance attention.* In some cases, he has an opportunity to get "bugs" out of the installation, poor tone, a feedback condition, noise, or something of that sort. Theatre work on sound systems, except in small towns, is quite limited so far as the average radioman is concerned because of the fact that theatres in large cities may have their equipment serviced by factory representatives or by union organized servicemen. Unless you are affiliated with the union, in such cases, you just don't get a chance to work on the apparatus.

For small jobs, standard equipment used for checking radio receivers is all that's needed. A volt-ohmmeter, electronic volt-meter, tube tester, condenser bridge, oscilloscope, audio generator, are useful. In addition, a power level meter and audio signal tracer are helpful.

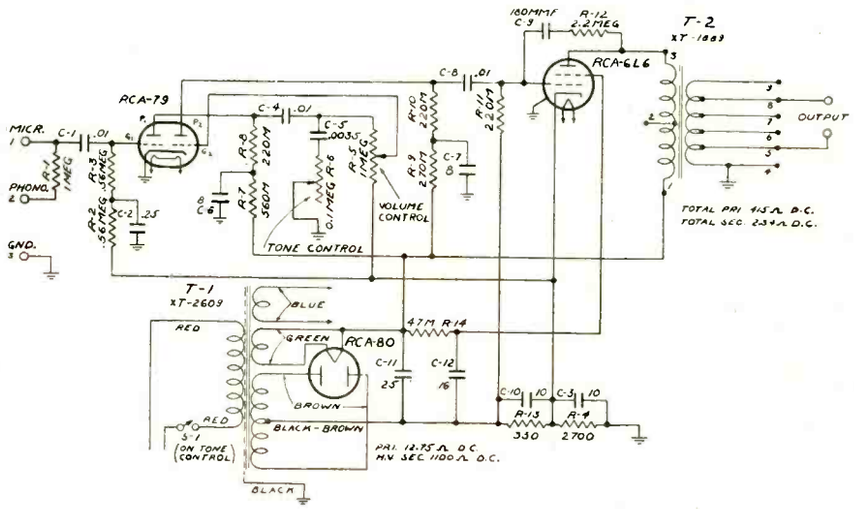

Figure 1. RCA Portable Sound System, Amplifier PG-111. (MI-4264 amplifier).

The systems encountered may be divided into four main types, portable, mobile (sound truck), medium power and high power. Descriptions of these types in the text below are followed by suggested servicing techniques for each of them.

P-A DESCRIPTIONS PORTABLE SYSTEMS

A typical portable system is shown in *Fig. 1.* This is the RCA PG-111. The power consumption is 56 watts at 115 volts, the over-all gain is 110 db (560,000 ohm input impedance) and the hum level is —15 db below 12.5 milliwatts. The frequency response is flat within plus or minus 2 db from 100 to 10,000 cycles per second.

The amplifier input signal is fed to the grid G1 of the 79. The amplified signal at the plate, P1, is fed to grid G2 of the 79 through volume control potentiometer R-5 and C-4. The amplified signal at the plate, P2, is fed to the grid of the 6L6 through C8. A larger signal at the 6L6 plate is obtained through 6L6 power gain and is fed to the primary of output transformer T-2. Negative feedback in the output stage is obtained through coupling network R12-C9, the signal voltage in the plate circuit being applied to R-11 through the network of R12-G9. The bias voltage on the 6L6 tube is the d.c. potential across the R13-R4 combination. The a.c. potentials across R13 and R4 are kept negligibly small by C10 and C3.

Note that the plate return of the 6L6 goes directly to the 80 rectifier filament while the 6L6 screen connects to R14 and is operated at a lower d.c. potential than the plate. Voltage values for the RCA PG-111 portable sound system are shown in *Fig. 2.* Both input circuits are high impedance. The mike input impedance is 560,000 ohms and the phonograph input impedance is, with mike connected, 1 megohm. It is preferable to use a high impedance mike. However, a microphone of any impedance value

ADDRESS INSTALLATIONS

by W. L. MOODY

that is reasonable may be used provided the input signal to the grid is above a minimum of 175 microvolts or —83 db. The maximum input level at the mike input terminals must not exceed —10 db or 0.8 volt.

When the microphone is not connected, the phono input voltage should not be less than 525 microvolts (—74 db) nor in excess of 2.3 volts (—0.725 db). With the mike connected to terminals 1 and 3, the phono input should not be above .0048 volt. A high impedance phono pickup is recommended for use with this amplifier, but any pickup delivering the necessary voltage may be used. The output impedances for various connections are shown in *Fig. 3*.

OUTPUT IMPEDANCES

Impedance in Ohms	Secondary Terminals	Impedance in Ohms	Secondary Terminals
0.35	4 - 5	4.5	7 - 9
0.55	5 - 6	5.0	4 - 7
0.75	6 - 7	6.8	5 - 8
1.0	7 - 8	9.0	6 - 9
1.25	8 - 9	10.0	4 - 8
1.8	4 - 6	14.0	5 - 9
2.9	5 - 7	19.	4 - 9
3.6	6 - 8		

Figure 3. Output Impedances, RCA PG-111.

MOBILE SYSTEM

A typical mobile amplifier is the THORDARSON T-30W12 shown in *Fig. 4*. A 6J7 functions as a preamplifier on mike service and feeds into a second 6J7 grid circuit. Into this circuit is also fed the phono pickup signal, the relative levels being governed by the settings of potentiometers R-2 and R-6. A 6SC7 is used as a voltage amplifier and phase inverter. The two 6V6-G tubes function in a pushpull class A output stage. The output transformer has a tapped secondary permitting impedance matching to a variety of load impedances. An output of about 12 watts can be expected if the distortion is not to be excessive. The B supply uses a vibrator and obtains primary power from a standard six volt storage battery.

SOCKET VOLTAGES

Voltages Measured to Ground
Line Voltage 120

Tube	Plate Volts D. C.	Screen Volts D. C.	Grid Bias D. C. Volts	Heater Volts A. C.	Cathode Current D. C. M. A.
RCA-79	First plate *123 56 Second plate *124 81	———	*1.81 1.42 (across R-4)	6.6	0.67
RCA-6L6	*306 305	*226 200	*15.5 15.5 (across R-13)	6.6	47.1
RCA-80	400/plate A. C.	———	———	5.0	———

** Operating values. Other voltages listed are measured with a 1,000 ohm per volt D. C. voltmeter. The scales used are 10, 50, 250, and 500 volts.*

Figure 2. Voltage data, RCA PG-111 Sound System.

MEDIUM POWER AMPLIFIER

A typical medium power amplifier is the STROMBERG CARLSON 34 shown in *Fig. 5*. This amplifier uses a total of six tubes, has a rated power output of 25 watts and a power gain of 109 db from the microphone input, 69 db from the phono input, both based on 50,000 ohms input source impedance. The response is 50 to 10,000 cycles with less than 3 db variation.

MARINE AMPLIFIER

A typical marine amplifier is that sown in *Fig. 6*. (STROMBERG CARLSON 30) The amplifier uses ten tubes, has an output of 50 watts and the maximum power consumption at 125 volts is 250 watts. The power gain is 105 db based on 30 ohms input impedance. A single control is used, the input volume control, which governs the amount of signal voltage fed to each 6SJ7 grid in the input stage. An interesting thing about this amplifier is that you have two separate channels, so that should one fail you would still get audio output from the channel remaining in service.

HIGH POWER AMPLIFIER

This is a typical high power amplifier. Several such units may be used in a large p.a. system to boost the total output. The amplifier is the STROMBERG CARLSON 25 shown in *Fig. 7*, with a conservative power output rating of 45 watts at less than 5% total harmonic distortion. It will deliver rated output from 1.73 volts across 16,500 ohm input connection (full primary) or .87 volts across 4125 ohm input connections (half primary). The gain is 54 db at 400 cycles based on 10,000 ohms input source impedance. The power consumption is 250 watts maximum. The useful frequency response is 75 to 10,000 cycles, and the hum and noise level is 60 db below rated output of 45 watts. The equipment is designed to be driven by a pre-amplifier and can be incorporated

Figure 4. Thordarson T-30W12, Mobile Sound System.

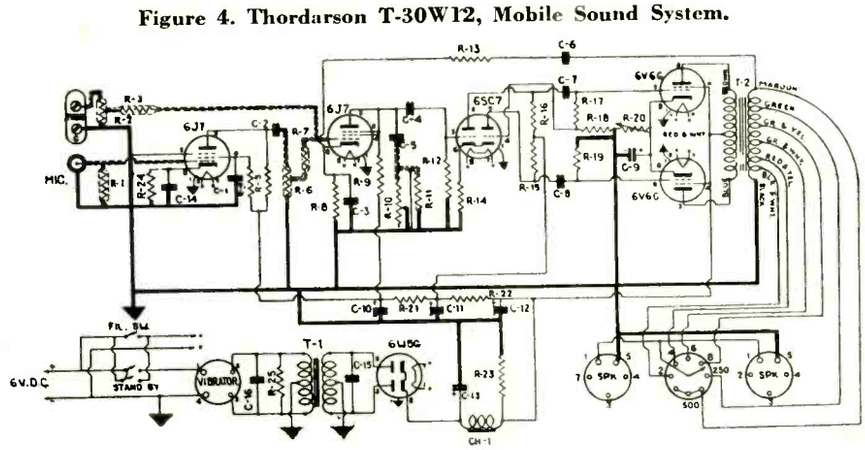

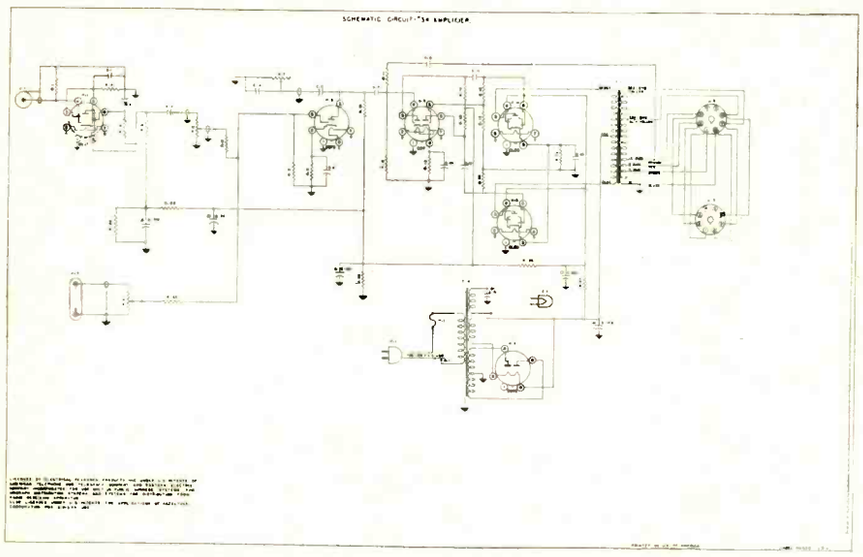

Figure 5. Stromberg-Carlson 34, Medium Power Amplifier.

in a centralized system or used at remote locations. Two input connections are provided, one of 16,500 ohms using the full primary of the input transformer and the other of 4125 ohms using the centertap and chassis connections.

The centertap, high gain connections are used when the amplifier is such a distance from the pre-amplifier that line loss must be made up by the additional gain.

SERVICE TECHNIQUES

The service troubles are those which might be expected of any amplifier, defective tubes, broken down condensers, etc. However, it is worth noting that excessive leakage in C10 reduces the bias on the 6L6. All notations refer to *Fig. 1.*

The plate current then rises and T-2 may be seriously overloaded. A short circuit or excessive leakage in C-8 would have a similar effect. Slight leakage in C-8 to the point where the operation of the 6L6, due to a changed grid potential, is on the non-linear part of the tube's characteristic curve leads to distortion. A gassy 6L6 output tube may cause considerable distortion, just as it often does in an ordinary radio receiver's audio amplifier system.

If C-9 or R-12 open up, there will be no negative feedback. The gain of the 6L6 will rise and so will the distortion. A short circuit in C-9 puts the plate voltage through R-12 on to the grid of the 6L6. The result is overloading of R-11, R-12, the output tube and T-2. Leakage in C-9 reduces the bias on the 6L6 grid. It is important that C-8 and C-9 have high leakage resistance and low leakage current. As replacements, should these units fail, 600 volt condensers are recombmended.

Excessive leakage in C-12 reduces the screen voltage on the 6L6 and overheats R-14. Distortion and loss of output, and overheating of R-12, are the symptoms of trouble. An open electrostatic shield connection may cause a hum. In that case, try connecting between each side of the power line circuit and chassis a .05 mfd. condenser rated at 600 volts. Bring the grounds to a common point on the chasis. An open or high power factor in C-11 causes reduced power supply output voltage and lowered volume and greater distortion.

Motorboating may be caused by an open in C-6 or C-7. An open in C-3 may result in unstable operation and distortion.

MOBILE SYSTEM

The oscilloscope is useful, too, in checking mobile amplifying equipment. Referring to *Fig. 4*, the waveform of the B supply ripple output can be checked in evaluating the performance of vibrator and buffer elements of the circuit. When a vibrator must be adjusted, the scope is particularly useful. While vibrators should be replaced whenever possible, in the event they are defective, there are occasions when an adjustment of a vibrator may be necessary. The troubles experienced in equipment of this kind are similar to those found in servicing auto radios.

Tube Location Chart

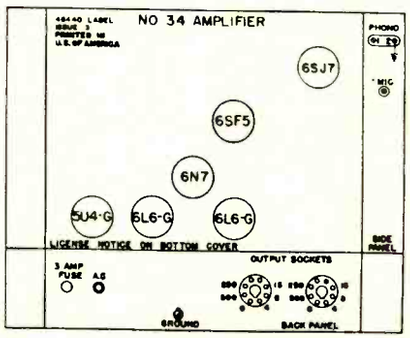

Figure 5-B. Stromberg-Carlson 34, Tube Location Chart.

MEDIUM POWER

The troubles in medium powered equipment are similar in many respects to those found in low power jobs. You may have a few more tubes or parts than in a low powered job but the service technique essentially is the same and the troubles yield to the application of audio signal tracing equipment, the scope and the standard volt-ohmmeter and vacuum tube voltmeter instruments. In *Fig. 9,* however, there is one thing that we can point out. The basic circuit of the amplifier is shown in *Fig. 5.*

If R23 is shorted and R21 is set at

Figure 5-A. Stromberg-Carlson 34, Voltage Chart.

NO. 34 AMPLIFIER VOLTAGE CHART

Tube			Terminal							
No.	Type	Purpose	1	2	3	4	5	6	7	8
1	6SJ7	First Stage Voltage Amplifier	0	*6.3	0.8	0	0.8	22	*6.3	130
1	6SF5	Second Stage Voltage Amplifier	0	1.1	0		160		*6.3	*6.3
1	6N7	Driver-Inverter	0	*6.3	140	0	0	140	*6.3	3.1
2	6L6G	Push-Pull Power Amplifier	0	*6.3	410	350	0	..	*6.3	27
1	5U4G	Full Wave Rectifier		415	..	†375	..	†375	..	415

No signal input. Power supply 117 volts 60 cycles.
D.C. volts measured to chassis using vacuum tube voltmeter.
*A.C. voltages measured between terminals indicated.
†A.C. voltages measured to chassis. Rectifier filament voltage 5.0 measured between terminals 4 and 6.
Variations of ±10% from above values may be obtained due to variations in tubes, resistors, etc.

minimum volume, the effect will be to short circuit the input to the voltage amplifier. In a similar way, a short in R6 would have the same effect if R5 is set at the minimum volume position, and in any event the various circuit elements are easily checked with an ohmmeter.

MARINE AMPLIFIER

The marine amplifier in *Fig. 6* uses a rather unique circuit arrangement. Two separate channels are employed. Suppose, in servicing, that a signal tracer shows the signal voltage is undistorted across R21 and across R22 in the 6SJ7 grid circuits, but a distorted signal voltage is obtained across R5 while the signal voltage across R6 is all right. We would, then, look for a fault in the channel employing the 6SJ7 connected to C13. If, for example, R23 and R16 change in value appreciably, the result may be nonlinear operation.

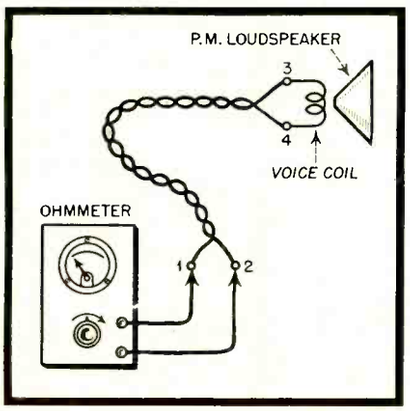

Figure 8. Testing loudspeaker of Fig. 7.

The voltages across R5 and R6 should be reasonably close to each other for proper balance, operation and minimum distortion. The signal voltages may be checked with a vacuum tube voltmeter with an audio signal furnished the input of the amplifier using a standard audio frequency generator. The audio generator will also be useful in practical p.a. work for making frequency runs on amplifiers and loudspeakers. The balance may also be checked with a scope, noting the vertical deflection obtained when each grid voltage is checked.

HIGH POWER

The amplifier shown in *Fig. 7* is a typical high power job. A number of them may be fed from a single source and be used to supply power to a number of loudspeaker systems. For example, two such amplifiers with a rated output of 45 watts each would give 90 watts total, 3 would give 45 x 3 or 125 watts, etc. If we have three such amplifiers in service, as shown in *Fig. 10*, and we note that the sound output of loudspeaker system No. 1 is distorted while No. 2 and No. 3 are all right, we should look for a fault in channel No. 1. As the output of 2 and 3 is all right, the driver and preceding elements are not causing the trouble. Therefore, the fault is localized to the No. 1 amplifier or loudspeaker system.

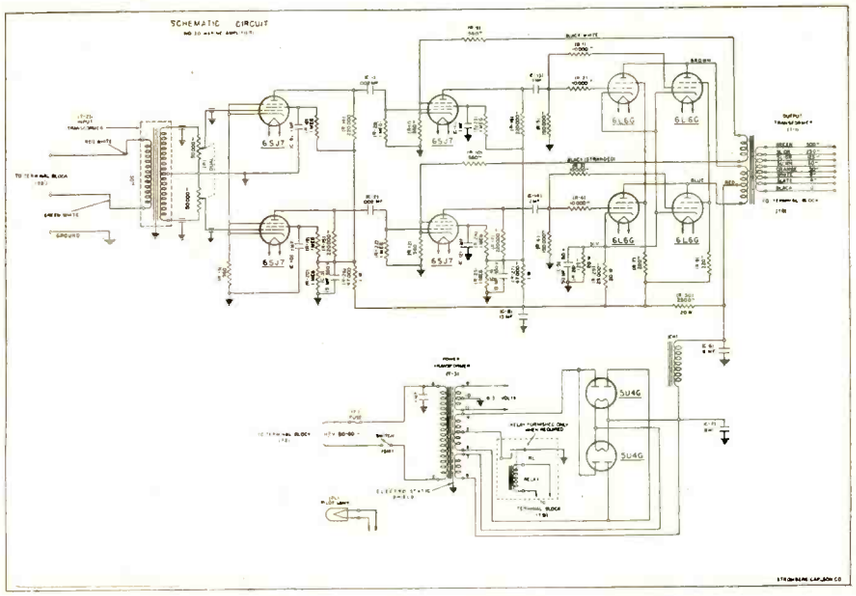

Figure 6. Stromberg-Carlson 30, Marine Amplifier.

Assuming an audio signal tracer or oscilloscope shows the signal is undistorted at the 6L6 grids in *Fig. 8* but distorted at the plates or across the load, the loudspeaker system is not at fault but merely reproducing the distortion fed to it. If the pair of 6L6 grids connected to R6 in the upper part of the diagram of *Fig. 8* don't get the same excitation as the 6L6 grids in the middle of the diagram, an unbalanced condition exists which may lead to serious distortion and loss of output.

In testing for the distortion, a record may be played at C and the audio signal can be checked for quality at various points in the system using a signal tracer. However, a little careful thought and reasoning from effect to cause before applying test instruments of any kind will pay dividends through the saving of time and effort in servicing p.a. systems.

If the distortion is observed only on record player operation while using elements A, B or D is satisfactory, it's logical to deduce that C is defective

[*see page 32*]

Figure 7. Stromberg-Carlson 25, High Power Amplifier.

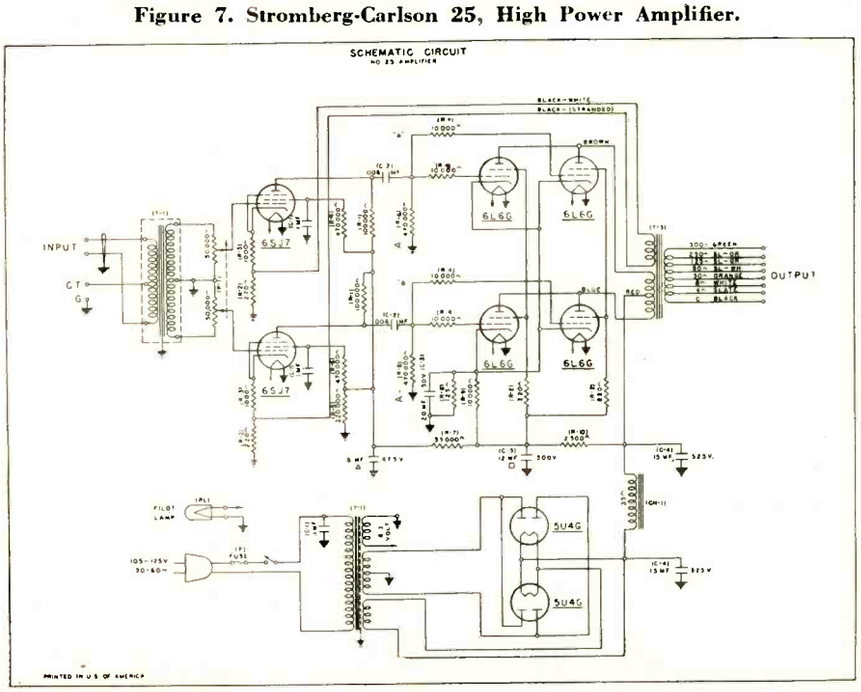

TRADE STANDARDS

by ***IRA KAMEN***

Director of Electronics, Conlan Electric Corp.

This report of a successful plan for installing and servicing television receivers may help other dealers.

TODAY, not tomorrow, is the "Era of Television". Manufacturers and dealers are developing installation and servicing plans which are based on a policy of "no dissatisfied customers", in order to promote a wide acceptance for home television receivers.

The following is the first report of a successful plan developed for the installation and servicing of television receivers on behalf of dealers by specialist service organizations approved by the manufacturer. It may serve as a guide to dealers and servicemen in areas where television broadcasting is now available or imminent. (For such areas, the reader is referred to the accompanying map, which is reproduced here from the November, 1946, issue of *"Radio Service Dealer"*).

It is obvious that the complex nature of television reception and of the television receivers demands that installation and service be performed by trained men. Too much is at stake; too much irreparable damage can be caused to the whole field of television, the good name of television manufacturers and the successful business of television dealers by only a few ill-conceived installations or amateurish service jobs during the initial stages of television promotion.

The television installation and service plan discussed here was developed for the Allen B. Du Mont Laboratories, Inc., to protect the integrity of their product and to promote a healthy, stable television business for their dealers. In the beginning some dealers considered that such a plan would deprive them of a potentially fruitful source of income from handling installation and the warrantee service themselves. But with due explanation of the protection, selling advantages, and good will offered in the plan, many of these dealers became convinced of the long range business advantages to them. By removing the service responsibility for the initial period from the dealer's overhead, the dealer is able to determine overhead more accurately and completely eliminate those "hidden" costs which have caused so many businesses to fail.

The basis for full success of any plan is mutual good faith between the

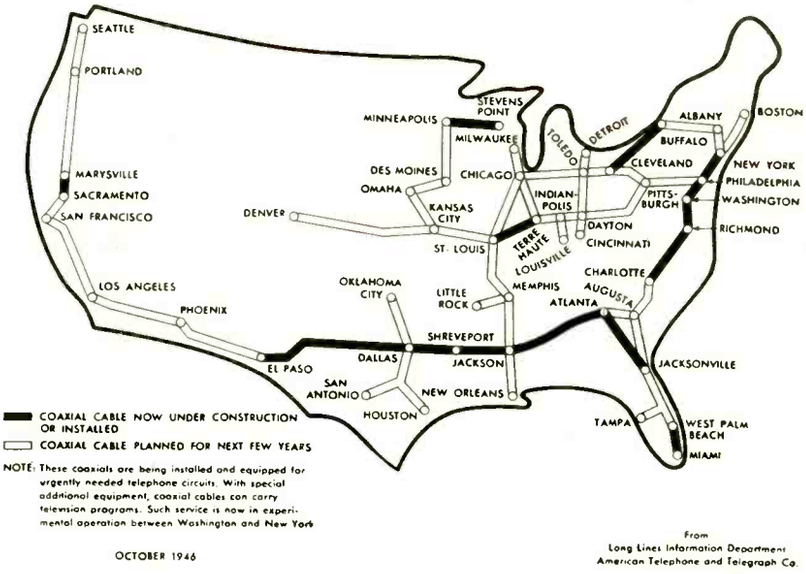

TELEVISION AREAS ARE ON THE INCREASE

Present commercial markets for television are New York, Chicago, Philadelphia, Schenectady and nearby cities. By the forepart of 1947, RCA television installations will be made in Washington, Los Angeles, Detroit, St. Louis, Minneapolis, Dallas-Ft. Worth and Baltimore. By mid-1947, more than 30 million people will be within the effective service range of television, forming a substantial base for the early rooting and development of the new industry. By early 1948, RCA expects to have installed other transmitters in Hartford, Providence, Trenton, San Francisco, Seattle, Los Angeles, Boston, Salt Lake City, Albuquerque, Cleveland, Miami, Omaha and Toledo.

Furthering television in its expansion across the country is the A.T.&T. which has already placed nearly 3,000 miles of coaxial cable in the ground, about half of which is now in telephone service. The lines now provide television and telephone service over coaxial cables linking New York, Philadelphia, Baltimore and Washington and telephone service linking Richmond, Greensboro, N. C. and Charlotte, N. C.; also Stevens Point, Wisc., and Minneapolis; Atlanta and Jacksonville and Shreveport, La., and Dallas. The company is already substantially expanding its original 7,000-miles-by-1950 program.

FOR TELEVISION INSTALLATIONS

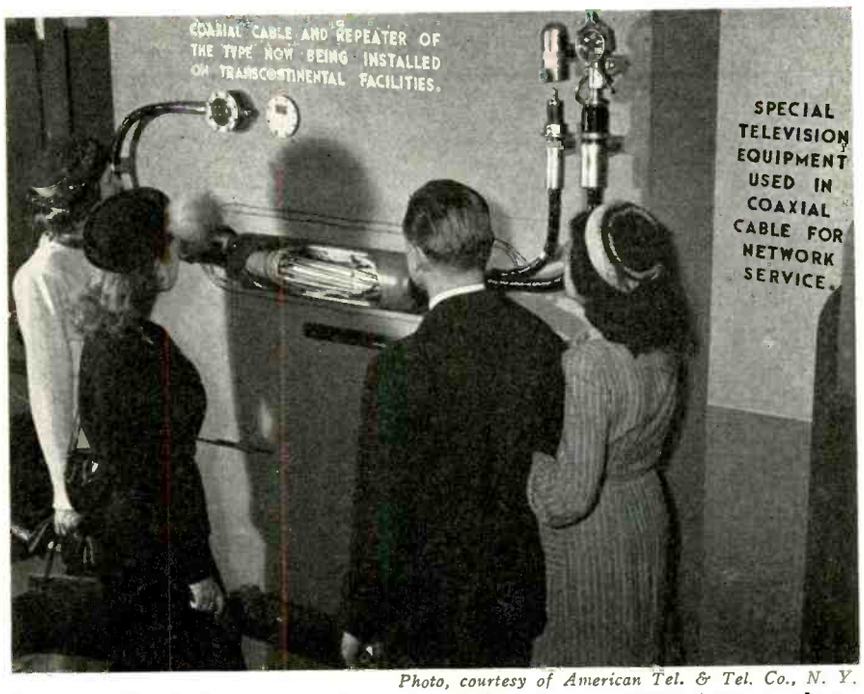

Photo, courtesy of American Tel. & Tel. Co., N. Y.

Coaxial cable of the type now being installed on transcontinental routes, shown with a repeater. Similar repeaters are spaced 8 miles apart.

television manufacturers and their dealers. The television manufacturers, of course, are dependent upon their service organization to perform installation and service on a high level, directed toward the development of the best possible reputation for their equipment. The dealer in turn is dependent upon the television manufacturers for maintenance of integrity of product. The television manufacturers are dependent upon their dealers for maximum cooperation under the service plan.

The following describes the purchaser contract plan which is offered by four independent service organizations approved by Allen B. Du Mont Laboratories, Inc., in the New York area, through the television dealer. These are Conlan Electric Corporation, A. E. Rhine Radio Engineering Service, Amie Associates and Victory Radio & Television.

This plan provides the reference as to what constitutes a standard installation and the contingencies against which the service organization and the dealer must be protected.

INSTALLATION

A). The service organization will furnish all materials for a *normal* installation.

1. A normal installation is one which can be completed by the use of the following:

(a) One of the DuMont approved antennas and antenna mast installations.

(b) Coaxial cable antenna lead-in not to exceed sixty (60) feet.

(c) Utilization of existing power outlet facilities.

(d) All prices quoted herein are based upon the use of engineering personnel in effecting installations. In those cases where local union personnel must be employed, due to restrictions on the customer's premises, the prices shall not apply, but a special contract shall be arranged between the parties hereto.

B). All Teleset installations are guaranteed for one year subject to proper handling by the Teleset purchaser, members of his family and/or others. The service organization will not be responsible for Teleset installations under the following conditions:

1. Acts of God, such as hurricanes, floods, electrical interferences and/or disturbances, etc.

2. Relocation of the antenna, cable or Teleset by service men other than approved servicemen.

3. The service organization guarantee will be effective only if installation and environmental conditions remain unchanged. (For example, the installation of X-ray or diathermy equipment in a house near the television installation may cause reception interference, or the addition of new structures which affect line-of-sight reception.) Such a condition cannot be held to be the service organization's responsibility. Every effort will be made during the original survey to anticipate and preclude such problems.

C). All Teleset installations made during absence of the owner are subject to the following conditions:

1. Teleset will be installed in location as per instructions received from hired help, members of the purchaser's family or others. Change of location will be made on a time and material cost basis. Unless written instructions are received, the service organization will not be held responsible for wrong locations or charges incurred for them.

2. Location of the antenna is subject to the same conditions as outlined for the Teleset.

SERVICING

A). The service policy is void in the event the seals on the back of the set are broken. Set is not to be tampered with; the authorized service agency should be called in.

B). All normal repairs will be made

CIRCUIT COURT

AUTOMATIC 614X, 616X

This 6-tube AC-DC receiver follows the usual pattern in circuit layout except for the use of fixed bias on the 35L6GT output tube. The illustration (*Fig. 1*) shows the schematic of the rectifier, filter and output stage. It will be seen that all the plate current in the set flows through the 150-ohm resistor from negative B to the common return point.

The 1-meg. grid resistor in the 35L6 stage is returned to the negative end of the 150-ohm resistor, rather than to common, thus utilizing the drop as fixed bias.

As is frequently done, particularly where an R-C filter is employed, the place of the output stage derives its potential directly from the cathode of the rectifier. All other tubes, including the screen of the output tube, are fed after the filter resistor, in this case, 1000 ohms.

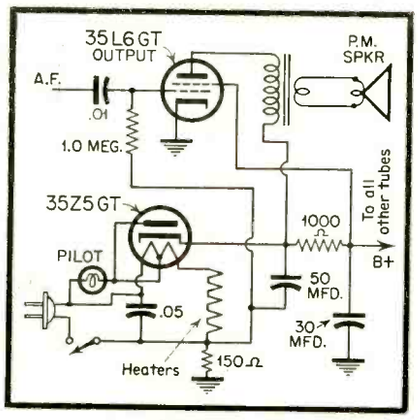

Figure 1.

ELECTRONIC LABS. INTERCOM. MODEL 2660

The frequency with which radio men are called upon to service and install allied equipment makes a working knowledge of at least the simple devices mandatory.

Widespread use of intercom. equipment presents both an obligation and an opportunity to the radio serviceman.

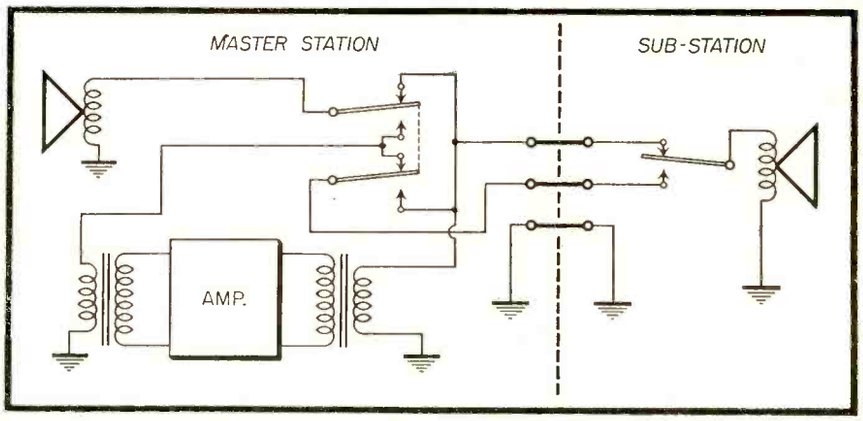

Figure 2.

Since the amplifier portion of cost systems follows traditional circuits, such as are found in common use in radio receivers, only the switching and interconnection of units requires study.

The E-L Model 2660 intercom. is finding widespread use and illustrated (*Fig. 2*) is the switching scheme employed. This unit, a two station affair, employs a simple AC-DC amplifier comprising a 14A7 feeding a 50A5 output tube, with a 35Y4 rectifier.

Examination of the circuit will show that a 3-wire cable is used. Both switches shown in the normal (up) position, connect the respective speaker (PM) to the secondary of the output transformer. If the remote station switch is depressed, that speaker is connected to the low impedance primary of the input transformer, and the master speaker remains connected to the output.

Similarly, if the master station switch is depressed, the reverse process takes place and speaking at the master provides output at the remote point.

This is one of the simplest arrangements and is useful only for two stations, but is typical of many now appearing on the market.

ESPEY MODELS 641, 642

The amplifier/phase inverter stage of an AC-DC phono unit used in the Espey 641 and 642 is shown (*Fig. 3*). Unusual is the push-pull connection of the crystal pickup. Both sides are above ground, and leads are shielded to the tube socket from the crystal. Bias for the 14B6 is developed across the 5K ohm resistor, but the whole cathode circuit is above ground for audio frequencies, returning the 100K ohm resistor.

A similar resistor appears in the plate circuit as its load, thus producing equal, but out of phase voltages, for application to the 35A5 push-pull grids.

Figure 3.

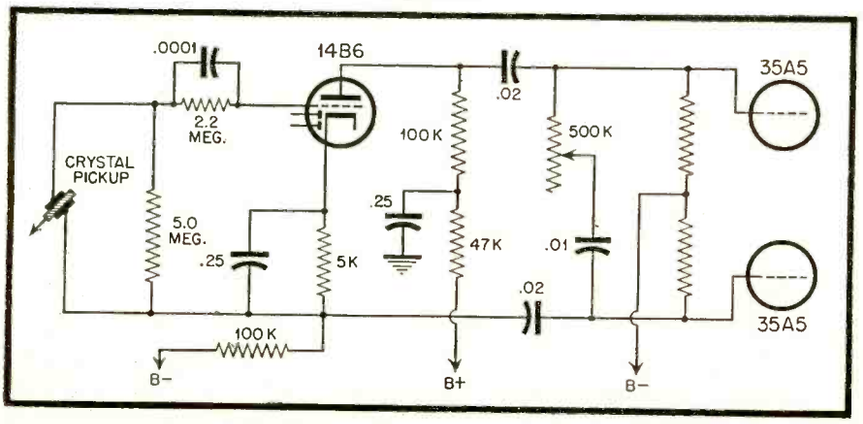

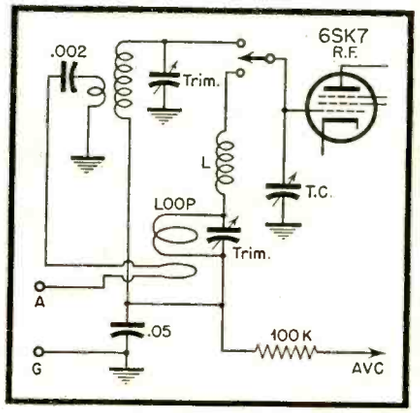

Figure 4.

DETROLA 572-220-226A

This 6-tube, AC-operated receiver incorporates in the grid circuit of the 6SK7 RF amplifier stage a good compromise scheme which should provide suitable pickup on either broadcast or shortwave bands, with or without external antenna connection.

An inspection of the circuit, the pertinent part of which is illustrated (*Fig. 4*), will show how the effect is achieved. In the short wave position, the grid connects to the secondary of an RF coil whose primary has the low impedance coupling coil of the broadcast band loop between the RF coil and the antenna terminal. Thus, with no external antenna, the mass of the broadcast loop gives consider-

[*see page* 38]

A SIGN OF SUCCESSFUL SERVICING

Bradley's has all fifteen RIDER MANUALS

A leading radio publication recently featured Bradley's of Red Bank, N. J. on an editorial spread, which told of the profitable efficiency of its service department. Characteristically, Bradley's has all fifteen RIDER MANUALS, depending upon them for authoritative information supplying all necessary servicing data on American-made receivers issued from 1930 to 1947.

From no other single source is this information available. In no other way can you have at your fingertips the information you need to diagnose troubles in any and all radio receivers that come to your shop for repair; receiver schematics, voltage data, alignment data, resistance values, chassis layouts and wiring, and trimmer connections.

Volume XV, covering sets issued during 1946, includes the exclusive Rider "clarified-schematics" which break down the composite diagrams of hundreds of complicated multi-band receivers into *individual* schematics of each circuit as it exists with each turn of the wave band or equipment switch.

Also with each copy of Volume XV is included the 150 page "How It Works" book, a practical guide to the theory of operation of the new technical features in the latest receivers. These exclusives are but two of the many important features in Volume XV, which also includes all popular "Ham" communication receivers, Scott receivers, Magnavox RA combinations and record player combinations.

RIDER MANUALS provide a systematic, compact, indexed data service, always in order, always ready with the information you must have for efficient, time-saving, profitable servicing. Year after year, after year, RIDER MANUALS keep pouring out profits for servicemen. Owners of Volume I, who bought it 17 years ago are still deriving benefits from it.

In spite of greatly expanded production, demand for RIDER MANUALS still exceeds supply. Place your order today.

VOLUME XV — JUST OUT!

2000 pages, plus 150 page "How It Works" Book $18.00 complete

Volumes XIV to VII (each volume)	**15.00**
Volume VI	**11.00**
Abridged Manuals I to V (one volume)	**17.50**
Record Changers and Recorders	**9.00**

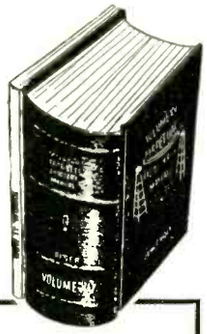

OTHER RIDER BOOKS

Inside the Vacuum Tube
Solid concept of theory and operation . . . $4.50

Understanding Microwaves
Provides foundation for understanding . . . 6.00

Radar
Entertaining, revealing, in lay language . . 1.00

The Cathode Ray Tube at Work
Accepted authority on subject 4.00

Frequency Modulation
Gives principles of FM radio 2.00

Servicing by Signal Tracing
Basic method of radio servicing 4.00

The Meter at Work
An elementary text on meters 2.00

The Oscillator at Work
How to use, test and repair 2.50

Vacuum Tube Voltmeters
Both theory and practice $2.50

Automatic Frequency Control Systems
—also automatic tuning systems 1.75

A-C Calculation Charts
Two to five times as fast as slide rule 7.50

Hour-A-Day-with-Rider Series—
On "Alternating Currents in Radio-Receivers"
On "Resonance & Alignment"
On "Automatic Volume Control"
On "D-C Voltage Distribution" **$1.25 each**

This new Rider Book, soon to be announced, will be of lasting usefulness to everyone interested in any phase of radio.

JOHN F. RIDER PUBLISHER, INC.

404 FOURTH AVENUE, NEW YORK 16, N. Y.

Export Division, Rocke International Corp., 13 E. 40th St., New York City. Cable ARLAB

RIDER MANUALS
MEAN SUCCESSFUL SERVICING

SERVICE DATA
STROMBERG CARLSON
AC-DC RECEIVER
MODEL 1101
SERIES NOS. 10-11

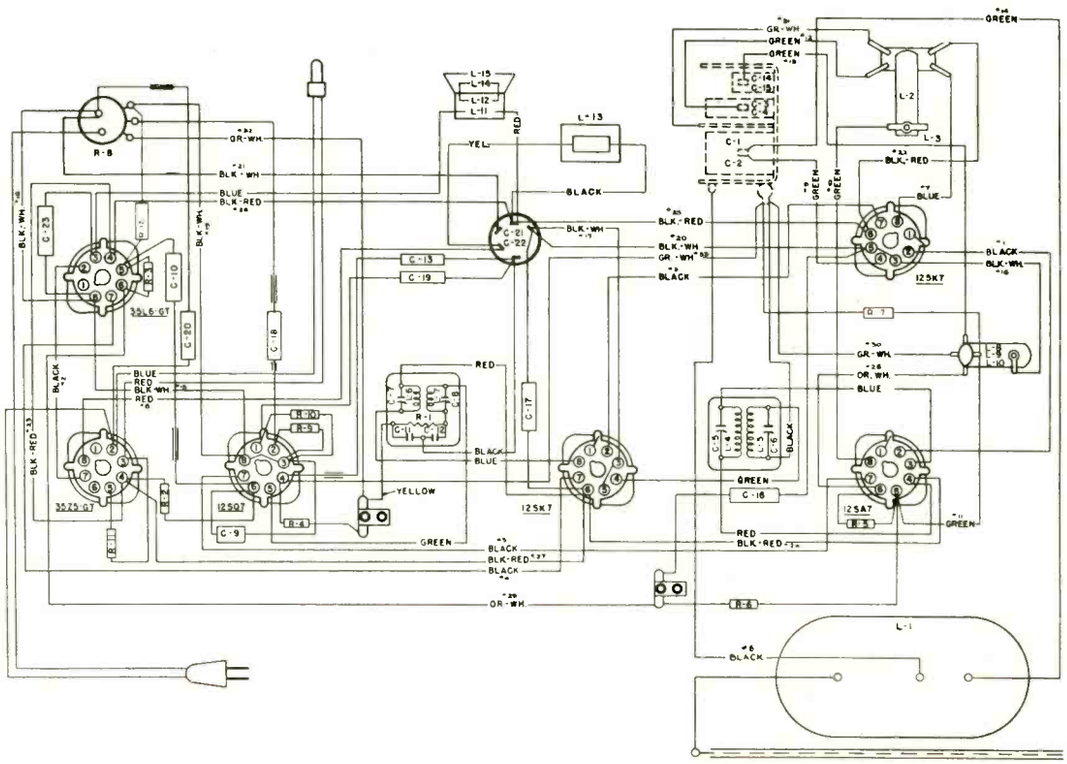

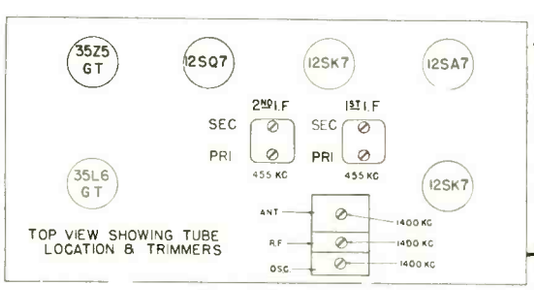

◀Tube and Trimmer Chart

Voltage Chart▶

Measurements are made at 117 volt line, using electronic voltmeter.

Except where otherwise indicated, voltages are D.C. and are positive with respect to the reference point which is the minus B or neutral buss, black and white wire.

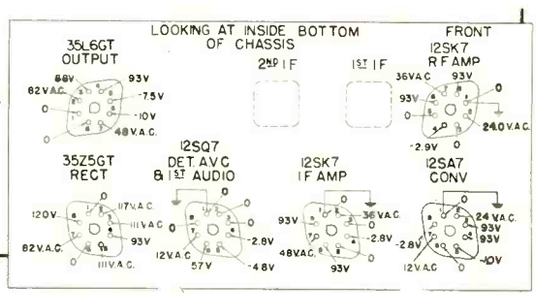

(To be continued)

NEW . . . Simpson Model 305RC Tube-Tester with "No Backlash"* Roll Chart

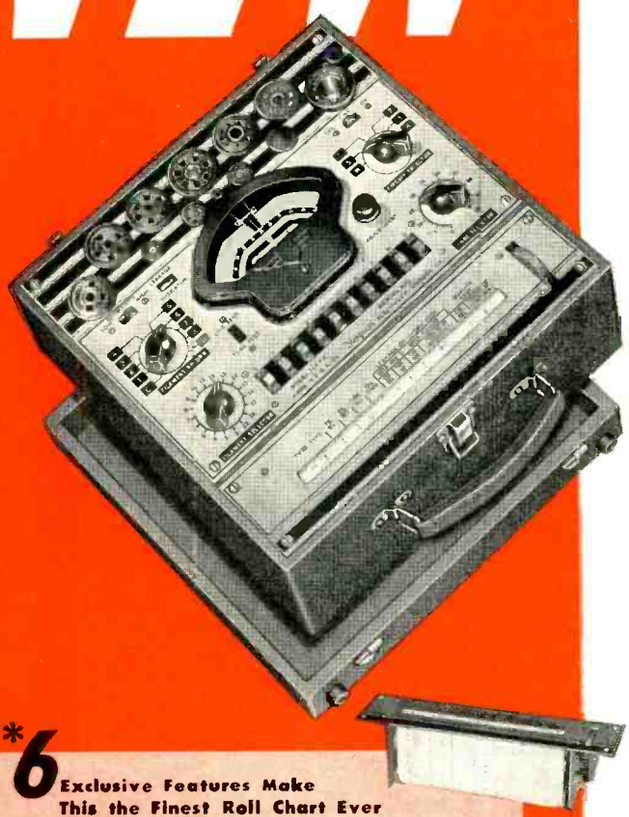

With the addition of the new Simpson "No Backlash"* Roll Chart to the 1947 version of our Model 305, this famous instrument becomes beyond question the finest tube-tester on the market in its price range. Read the description of this new Roll Chart in the panel below.

Model 305RC provides for filament voltages from .5 volts to and including 120 volts. It tests loctalc, single ended tubes, bantams, midgets, miniatures, ballast tubes, gaseous rectifiers, acorn tubes, Christmas tree bulbs, and all popular radio receiver tubes.

Like other Simpson tube-testers, the Model 305RC incorporates 3-way switching which makes it possible to test any tube regardless of its base connections or the internal connections of its elements. This method, the result of exhaustive research and expensive construction, protects the Model 305RC against obsolesence to a degree not enjoyed by competitive testers. No adapters or special sockets are required. In addition to having a complete set of sockets for every tube now on the market, this tester has a spare socket, to provide for future tube developments.

The Model 305RC has provision for testing pilot lamps of various voltages as well as Christmas tree bulbs. It tests gaseous rectifiers of the OZ4 type—also tests ballast tubes direct in socket for burnouts and opens. Has neon bulb of proper sensitivity for checking shorts. This tube-tester is fused, and has the latest improved circuit. It provides for line adjustment from 100 to 130 volts, with smooth vernier control.

Model 305RC is distinguished for its beautiful exterior. It has a two-tone metal panel in red and black on a satin-finished background. Sockets and controls are symmetrically arranged for quick operation. The large, modern, fan-shaped instrument has an exceptionally long scale. It has "good" and "bad" English markings, also a percentage scale for matching and comparing tubes. Cases, both portable† and counter style, are made of strongly built hardwood, durably and beautifully finished.

Size, 11"x11"x6". Wt. 10 lbs. Shipping wt., 15 lbs.
Dealer's net price, portable or counter model.....**$59.50**
For 60 cycle 115 volt current only.
For 220 volt or 60 cycle, add..... **7.50**
Standard Model 305, with book-type speed chart **49.50**

Counter Model 305RC. Same instrument as portable model, but set in fine walnut finished hardwood case, with tilted, easy-to-use panel.

†Finished hardwood cases are standard on portable models. When these are not available, the instrument is housed in attractive simulated-leather covered case.

*6 Exclusive Features Make This the Finest Roll Chart Ever Designed for Tube-Testers . . . . .

- "No Backlash" feature of this Roll Chart automatically takes up all slack in the paper chart and, by keeping it in constant tension, makes it impossible to turn the selector wheel without turning chart. Gives precision selection at all times. Also prevents chart from tearing or getting out of alignment.
- Gearing is such that only 6 turns of selector wheel will run the entire length of the 12½ ft. chart.
- Easy to read. The clear Lucite window is just wide enough to show 2 tube settings, or both settings on a multi-purpose tube.
- Entire unit removable by taking out four screws. Just lift from receptacle to make new entries or install new chart.
- Chart ingeniously fastened to rollers, affording easy replacement and constant alignment.
- Rigid, light-weight construction. Gear driving mechanism incorporates heavy-duty precision brass gears and parts.

SIMPSON ELECTRIC COMPANY
5200-5218 W. Kinzie Street, Chicago 44, Illinois
In Canada, Bach-Simpson, Ltd., London, Ont.

Simpson
INSTRUMENTS THAT STAY ACCURATE

Industrial MAINTENANCE

by LEWIS C. STONE, *Editor*

Radio serviceman can sell himself to the smaller manufacturers who use electronic devices in their production machinery, but who do not have full-time maintenance men.

THE field of electronic equipment servicing is wide open to radio service dealers. The machinery with which electronic circuits are used is, it is true, often very complex. But the circuits are no more involved than those found in radio receivers. And they take the same kind of equipment to trouble shoot—equipment which the service-dealer already owns. Industrial servicing is merely another opportunity to amortize the cost of his radio service equipment over more jobs. And those jobs can be done for more money. The level of charges can be higher because the value of the equipment involved is greater, and the loss of production when a machine won't work represents a considerable amount of cash. The radio service technician can charge more per job than for ordinary household radio receiver servicing work. For example:

●

"Recently," writes Vic Jenkins, "I had occasion to see a typical application of electronics in the industrial set-up. Possibly this example will help you to acquaint the service man with the possibilities of servicing beyond the immediate radio receiver in his neighborhood.

"A certain manufacturer of motor-operated devices had trouble with the small motors received by him from the motor manufacturer becoming unbalanced. In other words, the armature did not rotate true in the motor bearings.

"In order to test the motors and detect the unbalanced condition, the manufacturer went out and purchased a motor balancing device, costing him in the neighborhood of $3,000.

"Included in the expensive unit was a group of electronic circuits made up of a vacuum tube power supply, a form of oscillator and an electronic amplifier. As you know, all these devices contain vacuum tubes, resistors, condensers, transformers, choke coils, etc. The expensive testing device was therefore subject to all the ailments found in an ordinary home radio receiver, such ailments which could be detected and remedied by an experienced radio service man.

"The last time the writer had occasion to call on the organization in question, their manufacturing line was shut down because the $3,000 testing equipment was not functioning. Something had gone wrong in one of the electronic circuits and the company had to wait the convenience of the field service engineer who sold the device to them.

"After waiting about a week, the field engineer from the machine tool company which sold the device turned up and went to work to locate the trouble in the electronic portions of the machinery. Incidentally, he used a 20,000 ohms-per-volt Analyzer (it happened to be a Simpson 260 in this case), and eventually he located the source of trouble and got the machine working again.

"I have no doubt there are many other such applications of electronic equipment in industrial organizations and in manufacturing set-ups."

●

But don't get us wrong! This is still a nation of home radio listeners. It is still—by and large—an AM market. There are, any day in the year, at least a fourth of all home radio sets in the hands of some service-dealer, somewhere, being diagnosed, repaired and put into working condition again. There is no denying, nor discounting, the realness of the vast volume of straight radio servicing business actually being done throughout the length and breadth of this land. The radio service business is an end in itself, profitable, useful and essential.

But industry needs the radio service man too. Somehow time will have to be found for servicing electronic industrial equipment where it is similar to radio receiver makeup; where identical trouble shooting equipment can be used that the radio service dealer has on his work bench already.

●

In certain industrial areas, it is quite possible that there are service dealers who already are set up to handle electronic repairs on industrial machinery. They may have in their employ some young ex-GIs who have had a good grounding in electronics in the armed forces. They may have circularized the smaller factories and other industrial establishments in their towns, offering their services. They may have had some of these young GIs follow up with personal calls to "survey" the plants, and to make reports to the boss service-dealer who, in turn, is enabled to select certain plants which he may call on himself for the purpose of closing either of a number of services: Yearly contract for inspection and servicing; on-call inspection and servicing;

[*see page* 34]

J. K. Poff, service engineer, Astatic Corporation, addresses group of radio-phonograph service men at Poughkeepsie, N. Y., on crystals (Rochelle Salts) and their various applications. Copies of his paper entitled "Crystal Pickups," dealing principally with reproducing cartridges, their theory and application are available from the company, Conneaut, Ohio.

RADIO TUBES

EVERY SERVICE-MAN DISCOVERS

...WHEN HE CHARTS HIS SALES, THAT *GROWTH AND RISING PROFITS* COME FROM SATISFIED CUSTOMERS WHO BUY AGAIN!

VITAL to your shop's expanding success are the clients you've served well—who therefore will come back . . . as well as recommend you to *other* radio owners needing service.

Tubes which you install, determine to a great extent how well—and how long—repaired sets will perform. So give *your* clients the BEST! Always replace faulty radio tubes with General Electrics. They're tops in quality . . . long-lived . . . carry a famous name in which the public has learned to place complete confidence.

Thus you'll make loyal friends of owners whose radios you service, to a point where brand-new customers will become "frosting on the cake" instead of your principal source of revenue. From today on . . . build for *more repeat business*, increased profits, by installing and selling G-E precision-made radio tubes! *Electronics Department, General Electric Company, Schenectady 5, New York.*

G. E.'s fact-filled Tube Characteristics Book ETR-15 will help you in your radio service work. Send for your copy. It's free!

GENERAL ELECTRIC

176-F3-8850

FIRST AND GREATEST NAME IN ELECTRONICS

SHOP NOTES

ZENITH RECEIVERS—1940, CHASSIS 5808—1005—1103

Oscillates at 550 K.C.—improper adjustment of wave trap—too high resistance in plate circuit of 123a tube.

Automatic dead or antenna trimmer won't peak—usually due to open winding on compensating coil.

Noisy tuning—ground braid of gang rubbing against flywheel—Burrs on drive shaft shorting to volume control shaft. Dial pulley rubbing against dial or chassis.

Tuning indicator inoperative—resistor inside socket shorting to socket prong—loose lead in socket—cathode lug on voltage divider grounder by solder.

Set blocks—usually due to broken resistor in A.V.C. circuit of first detector.

SEARS ROEBUCK—MODELS 6036, 6136

A whistle, due to a beat between the second harmonic (930 kc) of the 465 kc I.F. and a 930 kc signal may be experienced. In localities where the 930 kc station is one that is frequently listened to, it will be advisable to shift the whistle to some other point where it will not be objectionable. This can be done by shifting the I. F. frequency of the receiver.

Determine at what point between 900 kc and 960 kc the whistle will be least objectionable. Dividing this frequency by 2 will give the new I. F. frequency to which the receiver should be aligned. For example, if it is determined that a whistle at 915 kc would not be objectionable, the I. F. should be realigned at 915/2 or 457.5 kc. Try to select the new I. F. frequency as near as possible to 465 kc.

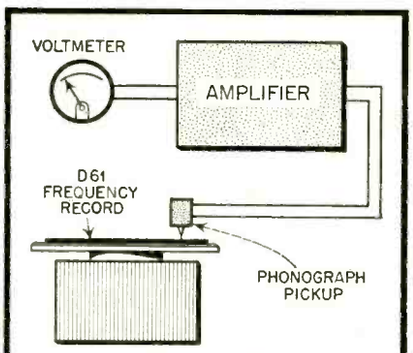

DIAGRAM FOR OBTAINING PICKUP OR AMPLIFIER RESPONSE CHARACTERISTICS

Figure 1.

USING FREQUENCY RECORDS

An excellent device available for servicemen who wish to check frequency response charateristics, and resonant peaks in audio amplifiers is the commercial Frequency Record. To make a frequency response run on a particular amplifier the circuit illustrated in *Fig. 1* is used.

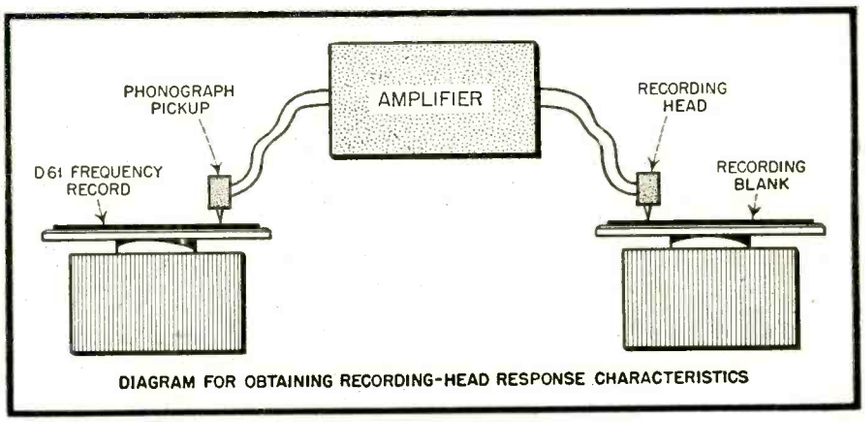

DIAGRAM FOR OBTAINING RECORDING-HEAD RESPONSE CHARACTERISTICS

Figure 2.

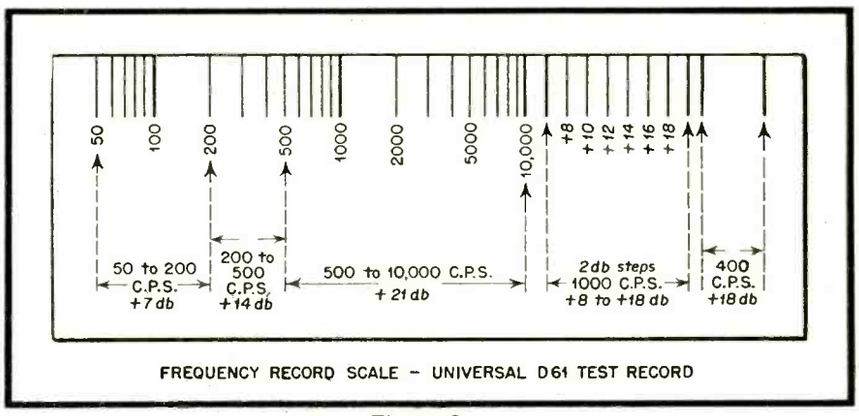

FREQUENCY RECORD SCALE – UNIVERSAL D61 TEST RECORD

Figure 3.

A resistor, equal in ohmage to the loud speaker as it looks into the tube, is connected to replace the loud speaker, and the voltages obtained across the resistor, as measured by a vacuum tube voltmeter are recorded.

Incidental resonant peaks in the amplifier or the cabinet housing the amplifier will readily manifest themselves by reconnecting the speaker and playing the test record at constant output throughout the frequency range.

Referring to *Fig. 2*, which shows the frequency characteristics of the Universal D61 test record, and *Fig. 3* which illustrates the connections, recording head characteristics may easily be obtained. In this test a compensated recording system which has been adjusted to reproduce within known limits is used in conjunction with the 1000 cycle tone which rises in amplitude from plus 8 to plus 18 DB. in 2 DB. steps. If the spacing of the recorded blank does not correspond to the spacing of a known head as the amplitude is increased, distortion will occur.

R.C.A. 156 TUBE TESTER

There has been some question as to the correct settings for testing 1T5GT tubes. On charts earlier than that included in the 156-D and E the information is incorrect. Correct test data follows:

Tube	Fil.	Class	Type	Test Buttons
1T5GT	1.5	A	21	3,4,5

PHILCO 1942 RECORD CHANGERS—ANGLE OF JEWEL

Philco presents this excellent Service Note on its 1942 Record Changers. Do not, under any circumstances, try to adjust the angle of the jewel. The jewel normally extends 1/32 inch below the guard. It should be vertical with respect to the surface of the record when viewed from in front of the pick-up head. When viewed from the side, the jewel is at quite an angle to the surface of the record. On 1/2 stack of records, the jewel should be at an angle of approximately 20 degrees. When playing the bottom record, the jewel will be at an angle of approximately 13 degrees. Do not attempt to change this angle. It permits the jewel to track in the groove with a minimum of surface noise. Any change from the original setting will affect the frequency response, and if the angle is less than given above, it will cause record wear.

Flutter, mistracking, and distortion can

[*see page* 37]

New! Series 200

A RELAY BY GUARDIAN with *Interchangeable Coils*

BUILT IN TWO PARTS

A. C. Coil Assemblies available for 6 v., 12 v., 24 v., 115 v.
D. C. Coil Assemblies available for 6 v., 12 v., 24 v., 32 v., 110 v.

★ Two basic parts—a coil assembly and a contact assembly — comprise this simple, yet versatile relay. The coil assembly consists of the coil and field piece. The contact assembly consists of switch blades, armature, return spring, and mounting bracket. The coil and contact assembly are easily aligned by two locator pins on the back end of the contact assembly which fit into two holes on the coil assembly. They are then rigidly held together with the two screws and lock washers. Assembly takes only a few seconds and requires no adjustment on factory built units.

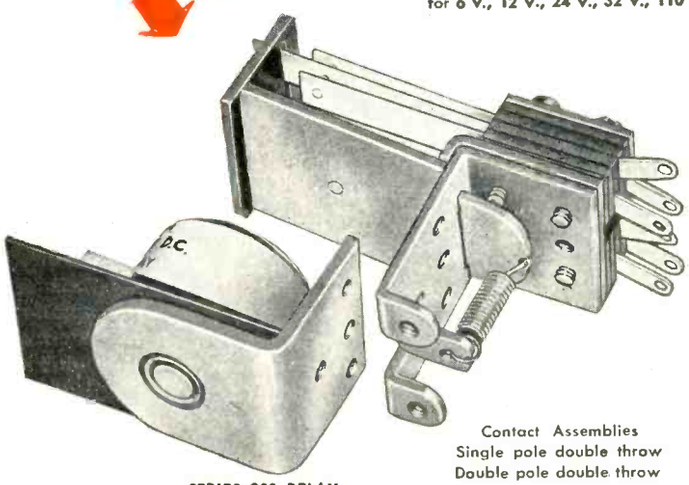

SERIES 200 RELAY

Contact Assemblies
Single pole double throw
Double pole double throw

On Sale at Your nearest jobber NOW!

See it today! . . . this amazing new relay with interchangeable coils. See how you can operate it on any of nine different a-c or d-c voltages — simply by changing the coil. Ideal for experimenters, inventors, engineers.

TWO CONTACT ASSEMBLIES

The Series 200 is available with a single pole double throw, or a double pole double throw contact assembly. In addition, a set of Series 200 Contact Switch Parts, which you can buy separately, enables you to build dozens of other combinations. Instructions in each box.

NINE COIL ASSEMBLIES

Four a-c coils and five d-c coils are available. Interchangeability of coils enables you to operate the Series 200 relay on one voltage or current and change it over to operate on another type simply by changing coils.

Your jobber has this sensational new relay on sale now. Ask him about it. Or write for descriptive bulletin.

GUARDIAN ELECTRIC
1606-C W. WALNUT STREET CHICAGO 12, ILLINOIS

A COMPLETE LINE OF RELAYS SERVING AMERICAN INDUSTRY

MERCHANDISE PRE-VIEWS

Dealers in metropolitan areas are selling the "Soundmirror" BK-401 (above) at $229.50. Servicing routines are in process. "Mail-A-Voice" BK-501 (below) records on paper discs which can be folded and mailed.

"Soundmirror" and "Mail-A-Voice"

A NEW "Soundmirror" instrument for home use and a "Mail-A-Voice" machine which is used for personal and business correspondence are being introduced to the market by the Brush Development Co., Cleveland, O.

This firm is the first to offer magnetic recording equipment in sufficient quantity for general distribution, including a nationwide sales campaign. This equipment is being manufactured in the Brush Cleveland plant.

The "Soundmirror" magnetic tape recorder (Model BK-401) can be placed on top of the home radio set or on a small table adjacent to it. Once connected to the radio or by having the "Soundmirror" microphone placed in front of the radio it records any radio entertainment desired. By simple push-button operation continuous recordings up to one-half hour in length are easily made on each reel of magnetized paper tape.

The cost of a reel of paper tape is so low, to be specific, $2.50, that it now becomes entirely possible for everyone to enjoy collections of symphonies, jazz, drama, news broadcasts, operas, etc. Any recording made on the "Soundmirror" recorder can be played back for at least a thousand times with no apparent loss of quality. The tape may be cut and patched together with ordinary cellulose tape.

It is thus easily possible for owners of "Soundmirror" recorders to make special "albums" of their favorite radio stars or of their own home entertainment. Magnetic paper tape is automatically "erased" when another recording is made on the same material which has been previously recorded.

Specifications for this instrument include a frequently response of 100 cycles per second to 5000 cycles per second; a signal to noise ratio of at least 40 db; a rewind speed of approximately 30 to 1 and a total weight of 40 pounds; power rating, 115 volts, 60 cycle AC.; power consumption, record 148w. playback 133w.

Public sale of the "Soundmirror" magnetic recorder is started. National distribution of this product will be accomplished within the next few months. The sale price is $229.50.

The other magnetic recorder is the Brush "Mail-A-Voice" (model BK-501) incorporating the principle of magnetic recording on paper discs that can be folded and mailed. These discs can be "erased" and used over and since the original cost is approximately seven cents each, this factor of "erasure" actually means that each "voice letter" costs less than the U. S. postage necessary for mailing.

The "Mail-A-Voice" both records and plays back the human voice. This instrument may open new worlds to business correspondence, personal intimate correspondence and will provide at long last a method of communication for the physically handicapped.

Both products are being distributed through the company's established distributors. Servicing of the instruments will be handled by jobbers and individual dealers, according to R. B. Matheson, manager of the Magnetic Recording Department.

Music Hall Record Player: Push-pull, high-fidelity reproduction; selenium rectifier plus 3 tubes; 5" Alnico Speaker. Approximately 4 watts output, weight 11 pounds. Available in two models: 1. 60 cycle, 117 volts, A.C. Domestic. 2. 50 cycle, 110 or 220 volts, A.C., either voltage being available by means of a specially designed switch with locking feature that prevents switch being thrown to 110 volt position when operating on 220 volts. Also contains protective fuse in easily accessible fuse receptacle. Separate volume and tone control. Tongue and grooved construction. Simulated alligator covering. Cover may be washed with water. 14x14x7½".

Music Hall Radio Mfg. Co., sole distributor: Merit Auto & Engineering Supply Co., 88 W. Broadway, New York City.

IN TRADE

[*from page 22*]

Mallory Adds Reps

Walter E. Harvey, manager, Wholesale Division, P. R. Mallory & Co., Inc., Indianapolis, Ind., announces appointment of representatives in three key sales areas to work with Mallory distributors in the radio service trade and the industrial market for electronic parts.

Clint Bowman handles the territory including Chicago, northern Illinois, Iowa and Wisconsin. Allen Shaw, in Pennsylvania, Maryland, Delaware, Virginia, District of Columbia and eastern New York. Ray Bridge covers the New England States.

Radio Stations Increase

There are an estimated 1,062 *standard AM* radio, 136 *FM radio* and 7 *commercial television* stations now on the air. The National Association of Broadcasters has reported FCC construction permits for *462 new standard radio* stations, and the chairman of the Federal Communications Commission, Charles R. Denny, has estimated that *700 FM stations* will be in operation before 1948. To these are added construction permits for at least *48 new television stations*, bringing the total to *974 new broadcasting outlets* for which plans have been completed.

Raytheon Activities

Headquarters of the Sales Department of Raytheon Manufacturing Company's Radio Receiving Tube Division has been established at 445 Lake Shore Drive, Chicago, according to announcement made by Carl J Hollatz.

All activities of the Division with respect to sales engineering and advertising and the sale of radio receiving tubes to equipment manufacturers and to the distributor trade are under the direction of Ernest Kohler, Jr., Sales Manager.

Curtis R. Hammond has been appointed Distributor Sales Manager in charge of all Raytheon renewal tube sales activities pertaining to jobber distribution of receiving, transmitting and special purpose tubes. Mr. Hammond will continue his activities in connection with receiving tube equipment sales and sales engineering service.

F. E. Anderson continues in charge of the Raytheon Radio Receiving Tube Division sales office at the plant in Newton, Mass., where his services are conveniently available to Eastern manufacturers.

Raytheon's Hearing Aid Tube Division continues under the direction of Norman B. Krim at Newton, Mass. Mr. Krim also manages the Radio Receiving Tube Division's special tube section for the manufacture of special purpose tubes for industrial and scientific electronic applications. Sales of Raytheon hearing aid and special purpose tubes are directed by Mr. Krim from the plant at Newton, Mass.

Olympic Appoints

A. A. Juviler, President of Olympic Radio & Television, Inc., makers of Olympic 'tru-base' radios and radio-phonograph combinations, announced today the appointment of Ralph H. Langley as Vice President in Charge of Engineering. He joined the company in October, 1946. Mr. Langley has been active in radio engineering for almost 30 years. He will be responsible for the development of Olympic's FM and television program.

EXTRA DOLLARS

[*from page 8*]

and even a separate volume control for still better control.

At any rate, here's an idea to play with. I honestly believe it can spell many extra dollars for the radio serviceman who's out for more business, and the taxi owner who's out to cut his operating expenses while catering to more fares.

Puts the SERVE in SERVICE

MODEL 2413
TUBE TESTER

- **INDIVIDUAL CONTROL FOR EACH TUBE ELEMENT** —Through flexible lever switching. Have confidence your tests are right.
- **SIMPLICITY OF OPERATION** — Fastest settings ever developed in a tester of its type.
- **SOCKETS**—One only for each kind required, *including sub-miniature,* plus one spare.

A multi-purpose test circuit—plus fast 3-position lever switching—enables you to put the SERVE in SERVICE with Model 2413. Test circuit provides for standardized VALUE test, SHORT AND OPEN element test. Simplified switching permits settings to be quickly made—just snap the switch up or down. Switching circuit gives individual control for each tube element and takes care of roaming elements, dual-cathode structures, multi-purpose tubes, etc. Filament Voltages, 0.75 to 110 volts, through 19 steps.

Smart in appearance, Model 2413 case is of heavy metal with attractive two-tone hammered, baked-on tan enamel finish.

Another Triplett feature is an external roll chart in a streamlined case that can be attached to the tester case by the hinge posts when cover is removed. It combines the advantages of both roll chart and book chart, for adding new data. The location is right, and settings can be quickly made.

With all these valuable features, Model 2413 is a tester of proved worth, for either counter or portable use, and is needed by every Service Shop.

You Need This Handy Model 666-H Volt-OHM-Milliammeter

Has A. C. and D. C. Volts at 1000 Ohms per Volt 0-10-50-250-1000-5000 (compensated copper-oxide rectifier provides for A.C. measurements); D.C. Milliamperes 0-10-100-500; resistance 0-300-Ohms; 10 Ohms reading at center scale; 0-250,000 Ohms.

STANDARDS ARE SET BY TRIPLETT

Precision first ...to last

Triplett

ELECTRICAL INSTRUMENT CO. BLUFFTON, OHIO

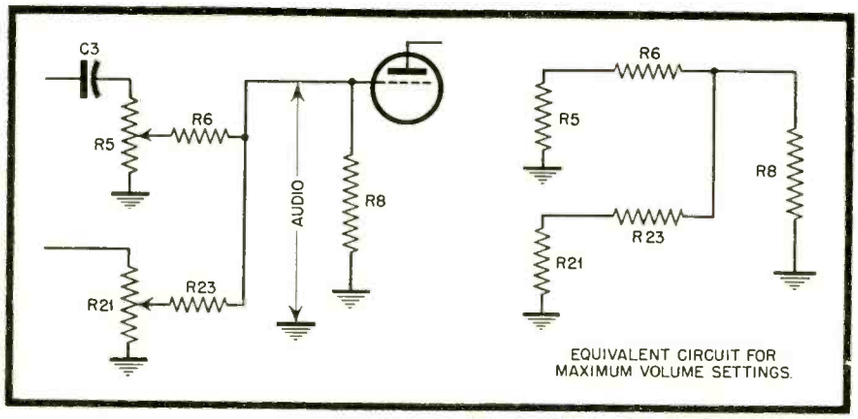

Figure 9 (above); Figure 10 (below).

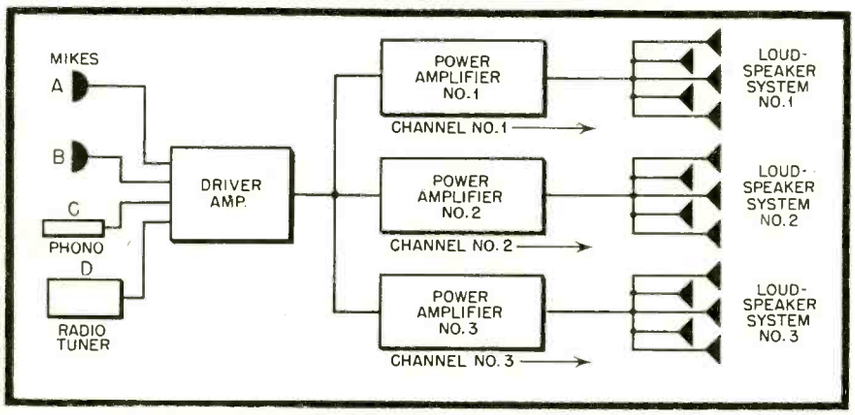

or there is something wrong in its operation or connections to the circuit. A faulty crystal pickup, for example, would produce appreciable distortion. The pickup could be checked by replacing it or connecting the audio signal tracer across it.

Similarly, operation of other elements can be checked. If operation of A results in noise or distortion while using B permits satisfactory operation, A may be faulty or there is something wrong with the pre-amplifier used with this mike. If the audio signal tracer has sufficient gain, it may be used to check the quality of the mike directly. When audio signal tracing equipment is not available, the mike may be checked by replacement, for example switching B to A and noting the results.

General Radios to R-L

Announcement has been made that R-L Electronic Corp., 731 West Washington Boulevard, Chicago, has been appointed distributors in Chicago and Cook County for the complete line of General radios, manufactured by General Television and Radio Corp., of Chicago.

LISTEN

LISTEN

LISTEN

IT'S A

Jensen

SPEAKERS

priced from

$5 to $1500

CONSTANTLY INCREASING PRODUCTION

LISTEN

Jensen

FINE ACOUSTIC EQUIPMENT

Designers and Manufacturers of Fine Acoustic Equipment

JENSEN MANUFACTURING COMPANY 6619 S. LARAMIE AVE., CHICAGO 38, U.S.A.
In Canada: Copper Wire Products Ltd., 11 King St. W., Toronto, Ont.

[from page 24]

or onroute calls (dropping in on one plant because it is near one being called on as part of an agreed arrangement).

At any rate, it seems that without going too far afield, the service dealer and his help can make real dollars grow from other than straight radio-servicing work, without deviating greatly from the techniques and working patterns they are already used to through their many years in radio servicing.

• •

EXTRA SET SALES

Your editor is now suggesting that servicing may become a matter of "replacement purchasing." That is, if a small set needs servicing, the customer brings it to the service dealer who will replace it with a factory re-built one of the same make and model for a nominal fee, and take the customer's set in exchange. Then he will send the exchanged radio to the factory for reconditioning, getting it back for his stock of repair-replacement sets. This will, according to Ye Ed who dreamed up this possibility, apply only to the smaller, comparatively inexpensive sets, where the cost of full repair might be so close to original cost that people who might hesitate to spend for servicing, might prefer, by adding a few pre-figured dollars, to acquire a completely reconditioned set. Besides, goes on this same gent in his plan of "replacement purchasing," cutting down the work on smaller sets would free radio service dealers for the more profitable, more complex servicing and repair jobs on FM and television and combination receivers, promised from 1947 on.

WESTINGHOUSE MARKETS NEW BATTERY LINE

A complete line of Westinghouse Plenti-Power dry batteries for farm and portable radio receivers is announced by the Home Radio Division of the Westinghouse Electric Corporation. It will be marketed through Westinghouse dealers and distributors throughout the United States with emphasis on rural areas and will feature an AB battery pack consisting of a 1½ volt A and a 90 volt B; and the 4½ volt C. Other batteries in the line include two AB packs for portables, and individual A and B batteries which in combination can meet the power requirements of almost all old and new portables.

Forecasting 1947 battery sales at $100,000,000 for the industry, L. E. Septer, assistant Division Sales manager, explained in the announcement that the first Plenti-Power batteries were made available for Westinghouse make farm and portable sets, but heavy demand warranted marketing of a complete line of radio batteries.

There are over 4,000,000 farm and 3,000,000 portable radios now in use and 1947 production will add 2,336,000 sets in these categories. With the average farm set using 1.67 A-B packs and portables 2.39 A-B batteries per year, an estimated $86,308,500 will be spent for replacements, and new radio battery sales should be $12,989,104.

Antenna Multicouplers

[*from page* 13]

of obtaining the desired output voltage of 140 to 150 volts at 150 ma. A conventional 5U4G rectifier with choke input (100 ohm chokes, 10 to 15 henrys) of two sections, together with a 500 volt c.t. transformer of 175 to 200 ma rating, would deliver the desired output voltage. The 2A3 rectifier was intended to give some voltage regulation, but the voltage drop through the tubes was so high that the grids were very near the top end of the bleeder with practically no regulation. This idea would have been more practical for lower load currents (50 to 1100 ma).

Broadcast Band Operation

The type of coupler shown in *Fig. 3,* or even *Fig. 4,* could be adapted for use in apartment buildings by omitting the high-pass filter, adding a few turns to the input transformer to improve the broadcast band response at a sacrifice of

Figure 5A. Untuned Wide-band Stage.

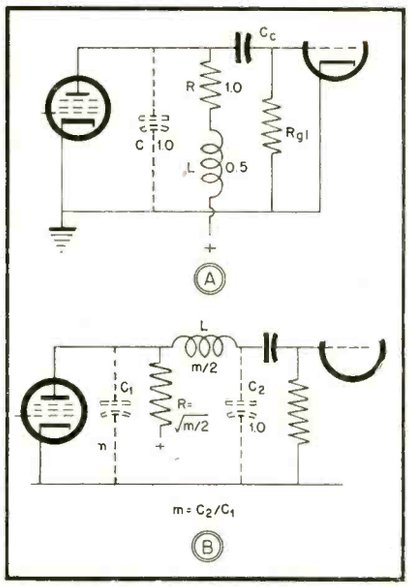

Figure 5B. Variation of Fig 5A with Greater Gain.

the high r-f bands, and perhaps adding more stages in parallel for a greater number of outlets. If the system is desired primarily for broadcast band reception, five to ten 6SG7 tubes could be paralleled for each second stage, and using three or four first stages instead of the two stages shown in *Fig. 3.* A heavy duty power supply would be needed, and the resulting system could be used to supply signals from one outdoor antenna to as many as 100 or 200 receivers. Concentric line feeders could be carried from the antenna coupler to all parts of the building.

SHOP NOTES

[*from page 26*]

all be caused by a stiff mirror and jewel assembly. With the record changer stopped, put a record on the turntable and place the tone arm on the record. This is the first step in checking the flexibility of the assembly. Then, open the peep hole in the pick-up cover—the light beam should be 5/32 inchwide, and should be half "on" and half "off" the photo-electric cell. Hook the Philco Scale, Part No. 45-2851, under the cover at the nose and pull laterally, first toward the spindle and away from the spindle. The jewel assembly should be sufficiently flexible to allow the light beam to be pulled completely off the cell and completely on the cell with less than 1 ounce of lateral pull—from 1/2 ounce to 3/4 ounce is the most desirable. Replace the mirror and jewel assembly if more than 1 ounce pull is required.

LOOP RECEIVERS—POLICE AND AMATEUR INTERFERENCE

R.C.A. suggests the following measures when image frequency interference of the above nature is present:

(1) See that loop circuit is precisely aligned with chassis and loop in cabinet.

(2) Revolve loop to position which minimizes response from undesired or interfering signals.

(3) Shift I.F. frequency up or down by 10 K.C. if interference is on one station only.

(4) Try using an antenna like the R.C.A. Magic Wave. This provides considerable attention in the image range. Use a wave trap with this antenna, if found beneficial.

(5) Try grounding receiver, or installing a suitable line filter if interfering signals appear to be introduced by the powerlines.

A wave trap associated with loop stages is not practical due to its effect on tracking.

VIEWTONE TELEVISION RECEIVER

No picture, no sound, sweep circuit operating: First filter condenser of low voltage power supply leaky or shorted. Replace.

No picture, no sound. Rectifier O.K. Look for short in 6C4 oscillator circuit due to defective mica condenser connected between plate and grid of tube.

Very small picture, no control, cannot be blown up. Look for defective filter condenser in 7N7 rectifier circuit.

PHONO MODELS—ZENITH

Distortion—Check for broken crystal in pick-up.

Low Volume—Check for poor contact in phono switch and plug contacts. Check shield on lead from crystal for poor ground.

CIRCUIT COURT

[*from page* 20]

pickup and would provide fair short wave performance. With application of an antenna, the loop coupling coil would cease to be an important factor.

When the set is switched to the broadcast band, a loading coil L, is connected between the grid and the loop. The loop provides pickup, but does not constitute all the inductance in the grid circuit The use of an externa, antenna will increase the pickup, but will not broaden out the circuit and result in such disturbing birdies and noise as might be the case if al lthe indctance in the grid circuit were concentrated in the loop. It will be noted that the trimmer for the broadcast band is across the loop nly, rather than the whole grid inductance, This results in higher Q in the grid circuit, making for better selectivity, but allowing compensation for loop variation and antenna coupling effect.

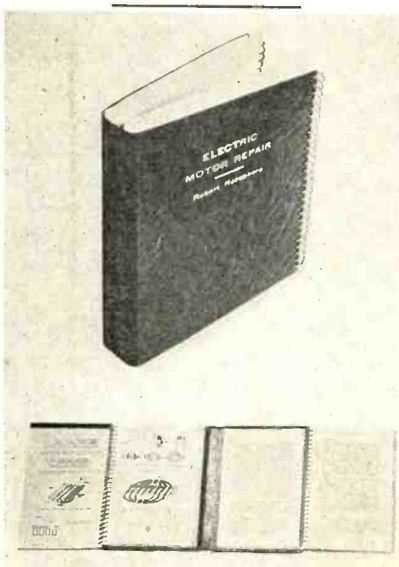

Electric Motor Repair

Murray Hill Books, Inc., 232 Madison Ave., N. Y. 16, N. Y. announce publication of "Electric Motor Repair" by Robert Rosenberg, at $5. a copy. Here, according to the publishers, is an intensely practical book that actually *shows* the man with little electrical knowledge how to repair all kinds of electric motors. Primary attention is focused on troubleshooting and repair, with complete instructions on rewinding. Included are individual chapters on each of the more common types of A-C and D-C motors, plus chapters on motor control systems, synchronous motors, generators, synchros and electronic control of motors.

Half the book is made up of drawings intended to be used as a direct working guide for the repairman. Its two-section arrangement (see cut) permits text and related illustrations to be looked at simultaneously.

TRADE STANDARDS

[*from page* 19]

without additional charge to the customer. All repairs due to misuse by the purchaser, members of the purchaser's family, acts of God, such as hurricanes, electrical interferences, floods and/or disturbances, etc. will be billed on a time and material basis.

In the administration of the above plan the mechanics of the operations between the dealer, the service organization and the television set purchaser are as follows:

1. Dealers submit the name of the customer who desires to purchase a television receiver.
2. If prospective customer's home or establishment is in a building which he does not own, he should obtain the landlord's approval for the installation prior to survey by television installation engineers.
3. Television installation engineers, with portable television equipment, survey location for proper television reception, except for areas of known reception.
4. The television engineer installs the antenna at time of survey if the customer signs release on approved installation.
5. There is no charge for the survey work on a disapproved installation.
6. For installations which are not "normal" (see beginning of article) and extras are involved, the customer is advised accordingly.
7. The customer pays for these extras, plus the cost of a 3-month contract, 6-month contract, or a one-year contract (optional) which includes all parts, labor and material.
8. Service organization by the customer is paid on completion of the installation.

There are no restrictions on the number of callbacks received from the customer, except when these callbacks are unjustified. Some customers expect motion picture reception from television and call the service organization every time the picture is marred by ignition noise, aircraft engines, etc. Such customer complaints will be referred to the manufacturer who will act as the arbiter on such matters.

The dealer's salesmen must be advised of all television installation and operational problems. Advising the customer of all limitations prior to the sale, and furnishing the customer with a well written instruction book preclude returned sets due to dissatisfaction with the results obtained in the home.

All servicemen are trained to properly instruct the customer in the operation of television receivers.

Ad Index

A totally new radio experience!

Stewart-Warner's thrilling new

FM *Strobo-Sonic Tone*

Against a background of velvet silence, you hear music in the richness of its full dimensions. You hear, at last, the beautiful harmonic overtones and the real-life quality of every instrument and voice.

With FM, static and interference vanish. Fading disappears. Your favorite type of music is revealed in a thrilling new brilliance, as true and natural as a personal performance.

Stewart-Warner FM reception is unbelievably distinct and clear—a totally new kind of listening pleasure.

Listen to Stewart-Warner *FM* Strobo-Sonic Tone for the wonderful difference!

FM-AM TABLE RADIOS

Selenium rectifier and 7 tubes, AC-DC, built-in antennae, 5-in. PM dynamic speaker, inverse feed-back. Smart wood cabinets in desert tan, walnut; plastic in ivory, walnut.

FM-AM CONSOLE RADIO-PHONOGRAPH

AM push-button tuning, rectifier and 8 tubes, tone control, permeability tuning, inverse feed-back, RF stage both bands, built-in antennae. AC-operated. Intermix changer. Two album compartments. Mahogany cabinet, no-lift top.

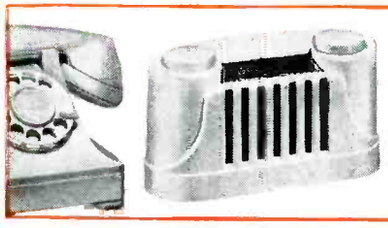

THE AIR PAL *A Console in a Jewel Case!*
Powerful AM performance anywhere you plug in AC-DC—ship, train, hotel, office, home. Small as a phone, yet has slide-rule dial, planetary tuner, built-in aerial. UL-approved. Weighs 3¼ lb. Ebony, walnut, ivory plastic. It's terrific!

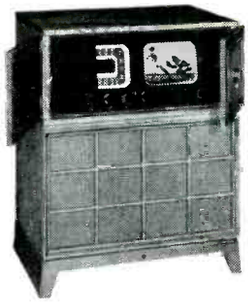

DIRECT-VIEW TELEVISION All 13 telecast bands with FM sound, plus the finest AM radio. Bright, clear pictures under living-room lights. A whole theater for the home, tavern, or hotel! Big 10-in. picture tube. Custom-built cabinets.

A MODEL FOR EVERY PURPOSE—A RADIO FOR EVERY ROOM

Stewart-Warner

AM *Radios* **FM**

Radio-phonographs • Television

CHICAGO 14, ILLINOIS

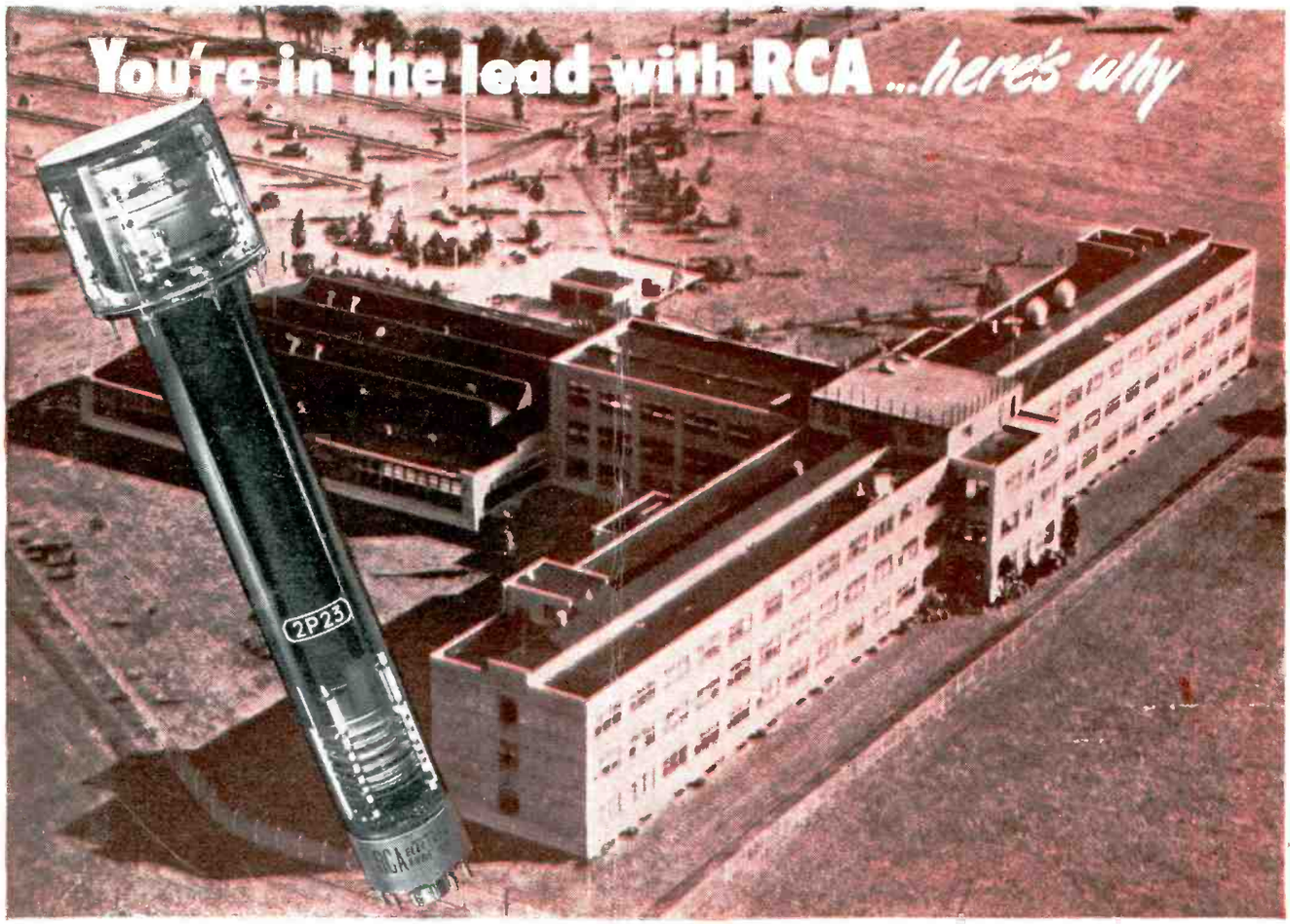

RCA Laboratories, Princeton, N. J., where televising of outdoor scenes has been greatly advanced through the development of the ultra-sensitive Image Orthicon camera tube.

Engineering...

the fountainhead of modern tube development is RCA

Through the years, RCA has maintained engineering leadership in tube research and design. And as a result of this pioneering, many of the far-reaching advancements in radio, television and electronics can be attributed to the development of new and revolutionary types of tubes by RCA scientists and engineers.

These RCA tubes are the nucleus of your present and future business. They make possible new and improved products for you to sell, and open up ever-widening markets for you to reach. Thus it is that your business can expand as the vast engineering resources of RCA widen the horizons of radio and electronic applications through the development of new electron tubes.

Engineering Leadership is another reason why *you're in the lead with RCA.* So, push RCA tubes and watch your business grow!

TUBE DEPARTMENT

RADIO CORPORATION of AMERICA

HARRISON, N. J.